ORDER NO. SD 7503-1008

# Service Manual

Technics

HI-FI COMPONENTS

Technics

## FM/AM STEREO RECEIVER

MODEL SA-5150

MODEL SA-5350

| TECHNICAL SPECIFICATIONS (IHF) | | SA-5150 | SA-5350 |
|---|---|---|---|
| **AMPLIFIER SECTION** | | | |
| 1 kHz continuous power both channels driven | | 20W+20W(4Ω), 17W+17W(8Ω) | 37W+37W(4Ω), 33W+33W(8Ω) |
| 20 Hz~20 kHz continuous power (SA-5350) both channels driven | | ---------- | 30W+30W(4Ω), 28W+28W(8Ω) |
| 40 Hz~20 kHz continuous power (SA-5150) both channels driven | | 16W+16W(4Ω), 16W+16W(8Ω) | ---------- |
| Power bandwidth (both channels driven at 8Ω) | | 5 Hz~35 kHz, −3 dB | 5 Hz~35 kHz, −3 dB |
| Total harmonic distortion | | 0.8 % | 0.5 % |
| Intermodulation distortion | | 0.8 % | 0.7 % |
| Residual hum & noise | | 0.7 mV | 0.6 mV |
| Damping factor | | 20 (8 Ω) | 20 (8 Ω) |
| Input sensitivity and impedance | PHONO | 2 mV/50 kΩ | 2 mV/50 kΩ |
| | AUX | 180 mV/30 kΩ | 180 mV/40 kΩ |
| | TAPE PLAYBACK | 180 mV/30 kΩ | 180 mV/40 kΩ |
| S/N (IHF, A) | PHONO | 70 dB | 70 dB |
| | AUX | 90 dB | 90 dB |
| Frequency response | PHONO | RIAA standard curve ±1 dB | RIAA standard curve ±0.5 dB |
| | AUX | 7 Hz~60 kHz, ±3 dB | 5 Hz~60 kHz, $\pm\frac{1}{3}$ dB |
| Tone control | BASS | 50 Hz, +10 dB~−10 dB | 50 Hz, +10 dB~−10 dB |
| | TREBLE | 10 kHz, +10 dB~−10 dB | 10 kHz, +10 dB~−10 dB |
| Loudness control (volume at −30 dB) | | 50 Hz, +10 dB | 50 Hz, +10 dB |
| High filter | | | 7 kHz, −6 dB/oct. |
| **FM TUNER SECTION** | | | |
| Frequency range | | 88~108 MHz | 88~108 MHz |
| Sencitivity | | 1.9 μV | 1.9 μV |
| Total harmonic distortion | STEREO | 0.4% | 0.4% |
| | MONO | 0.3% | 0.3% |
| S/N | | 70 dB | 70 dB |
| Frequency response | | 20 Hz~13 kHz, $\pm\frac{1}{2}$ dB | 20 Hz~13 kHz, ±1 dB |
| Alternate channel selectivity | | 70 dB | 70 dB |
| Capture ratio | | 1.8 dB | 1.6 dB |
| Image rejection at 98 MHz | | 50 dB | 50 dB |
| IF rejection at 98 MHz | | 60 dB | 70 dB |
| Spurious response rejection at 98 MHz | | 65 dB | 65 dB |
| AM suppression | | 50 dB | 50 dB |
| Stereo separation | 1 kHz | 40 dB | 40 dB |
| | 10 kHz | 30 dB | 30 dB |
| Leak carrier | | −40 dB | −45 dB |
| **AM TUNER SECTION** | | | |
| Frequency range | | 520~1610 kHz | 520~1610 kHz |
| Sensitivity | | 30μV, 350μV/m | 30μV, 230μV/m |
| Selectivity | | 25 dB | 25 dB |
| Image rejection at 1,000 kHz | | 40 dB | 45 dB |
| IF rejection at 1,000 kHz | | 50 dB | 50 dB |
| **GENERAL** | | | |
| Power consumption | | 164 W | 300 W |
| Power supply | | 110/120/220/240 V | 110/120/220/240 V |
| Dimensions (W×H×D) | | $16\frac{17}{32}$"×$5\frac{1}{2}$"×$13\frac{31}{32}$" (420×140×355) mm | $16\frac{17}{32}$"×$5\frac{1}{2}$"×$13\frac{31}{32}$" (420×140×355) mm |
| Weight | | 15.5 lb. (7 kg) | 21.2 lb. (9.6 kg) |

For accommodating future improvements, specifications are subject to change without notice.

**Matsushita Electric**
Matsushita Electric Trading Co., Ltd.
P. O. Box 288, Central Osaka, Japan

## ■ LOCATION OF CONTROLS

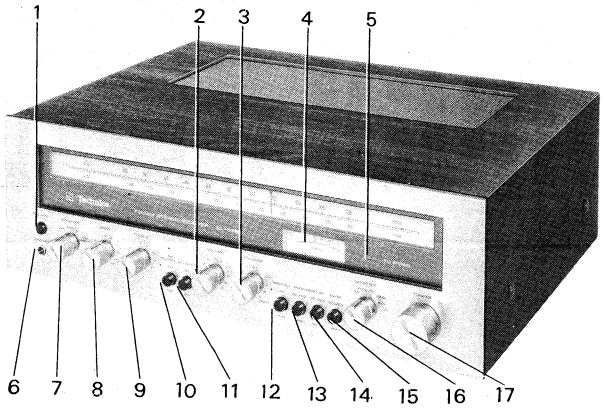


**Model SA-5350**

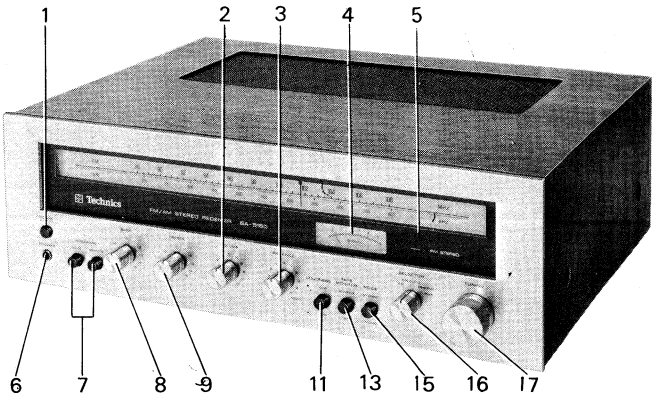


**Model SA-5150**

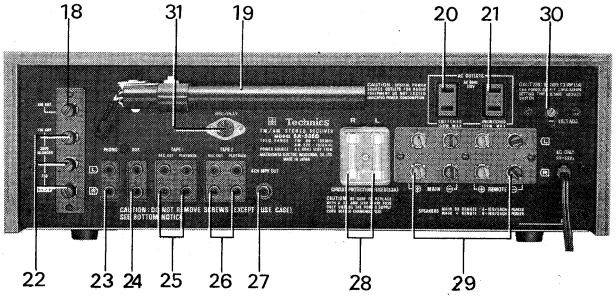


**Model SA-5350**

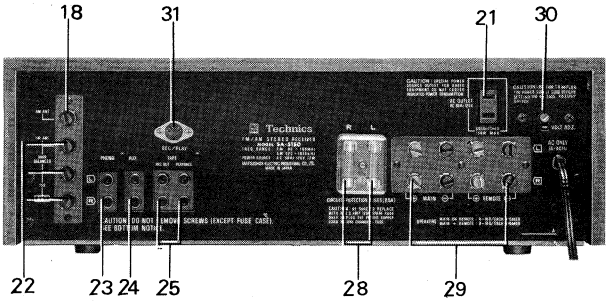


**Model SA-5150**

1. POWER SOURCE SWITCH
2. VOLUME CONTROL
3. BALANCE CONTROL
4. SIGNAL METER
5. STEREO INDICATOR (STEREO EYE)
6. HEADPHONES JACK
7. SPEAKERS SWITCH
8. BASS CONTROL
9. TREBLE CONTROL
10. FM MUTING SWITCH
11. LOUDNESS SWITCH
12. HIGH FILTER SWITCH
13. TAPE MONITOR (TAPE 1) SWITCH
14. TAPE MONITOR (TAPE 2) SWITCH
15. MODE SWITCH
16. SELECTOR SWITCH
17. TUNING CONTROL
18. AM ANTENNA TERMINAL
19. AM FERRITE CORE ANTENNA
20. AC OUTLET.....Switched (Not Attach for England)
21. AC OUTLET.....Unswitched (Not Attach for England)
22. FM ANTENNA TERMINALS
23. PHONO INPUT TERMINALS
24. AUX INPUT TERMINALS
25. TAPE MONITOR (TAPE 1) TERMINALS
26. TAPE MONITOR (TAPE 2) TERMINALS
27. 4 CH. MPX OUTPUT TERMINAL
28. CIRCUIT PROTECTION FUSES
29. SPEAKER TERMINALS
30. VOLTAGE SELECTOR SWITCH
31. TAPE MONITOR DIN SOCKET

## ■ DIAL CORD INSTALLATION GUIDE

1. Dial cord length is 78 3/4" (200cm).
2. Tuning gang is positioned at maximum capacity. (Frequency is minimum)
3. Arrow marks (1~8) indicate correct order and direction of stringing dial cord.

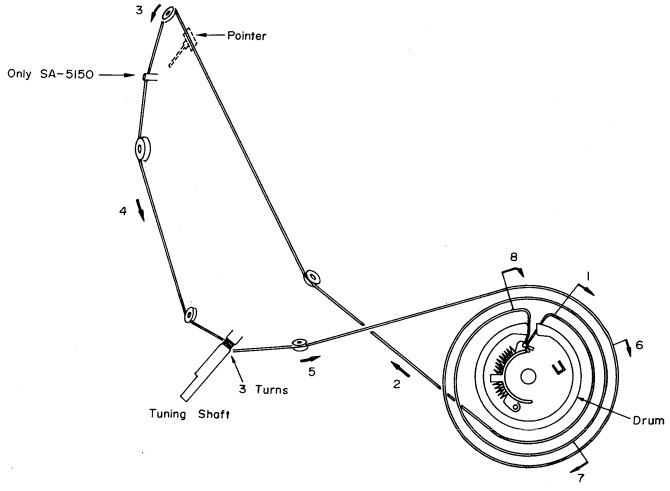

# ALIGNMENT INSTRUCTIONS.....READ CAREFULLY BEFORE ATTEMPTING ALIGNMENT

**Note :** The "$I_{CQ}$" adjustment should be started 1~2 minutes after setting the power switch to the ON position.

| | CIRCUIT | DC VTVM CONNECTION | ADJUSTMENT POINTS | REMARKS |
|---|---|---|---|---|
| | **MAIN AMP ALIGNMENT.....Only Model SA-5350** | | | |
| 1 | $I_{CQ}$ | Connect DC VTVM between point Ⓩ [Positive side] and point Ⓨ [Negative Side]. (Left and Right channels) | $V_{R601}$ [Left and Right channel] | Make adjustments so that the indication on DC VTVM becomes 5 mV. |

**Notes :**
1. Volume control .....Maximum
   Variable (FM-IF Alignment)
2. Balance control .....Center
3. Mode switch .....Stereo
4. FM muting switch .....Off (Model SA-5350)
5. Selector switch .....AM (AM Alignment)
   FM Auto (FM Alignment)
6. Tape monitor switch.....Source
7. Maintain line voltage at rated voltage.
8. Output of signal generator should be no higher than necessary to obtain an output reading.

| | SIGNAL GENERATOR or SWEEP GENERATOR | | RECEIVER DIAL SETTING | VTVM or SCOPE CONNECTION | | ADJUSTMENT POINTS | | REMARKS |
|---|---|---|---|---|---|---|---|---|
| | CONNECTION | FREQUENCY | [DISTANCE] | SA-5350 | SA-5150 | SA-5350 | SA-5150 | |
| | **AM ALIGNMENT** | | | | | | | |
| 2 | High side through 0.001 μF to $TP_5$, Common to chassis. | 455 kHz (Set for England to 470kHz) | Point of non-interference. | **$TP_1$** | **$TP_{104}$** | $T_1$ (AM 1st IFT)<br>$T_2$ (AM 2nd IFT) | | Adjust for maximum output. |
| 3 | Fashion loop of several turns of wire and radiate signal into loop of receiver. | 600 kHz (30% Mod. with 400 Hz) | 600 kHz [15.7mm (5/8")] | Speaker terminals of set. | | $L_9$ (AM OSC Coil)<br>$L_8$ (AM ANT Coil) | | Adjust for maximum output. |
| 4 | | 1500 kHz (30% Mod. with 400 Hz) | 1500 kHz [191.3mm (7 17/32")] | Speaker terminals of set. | | Trimmer $CT_4$ (OSC)<br>$CT_3$ (ANT) | Trimmer $CT_5$ (OSC)<br>$CT_4$ (ANT) | Adjust for maximum output. Repeat steps (3) and (4). |
| | **FM-IF ALIGNMENT** | | | | | | | |
| 5 | | | Point of non-interference. | Speaker terminals of set | | $T_{101}$ (DISCRI IFT) [Primary] | | Adjust for maximum output noise. |
| 6 | | | Point of non-interference. | Between **TP4** and **101** terminal | Between **$TP_{101}$** and **$TP_{102}$** | $T_{102}$ (DISCRI IFT) [Secondary] | | Make sure that DC VTVM becomes 0V. |
| | **FM-RF ALIGNMENT** | | | | | | | |
| 7 | Connect to FM antenna terminal through FM dummy antenna (300Ω). | 90 MHz (100% Mod. with 400 Hz) | 90 MHz [29.2mm (1 1/8")] | Speaker terminals of set. | | $L_6$ (FM OSC Coil)*<br>$L_4$ (FM DET Coil)<br>$L_2$ (FM ANT Coil) | | Adjust for maximum output. |
| 8 | | 106 MHz (100% Mod. with 400 Hz) | 106 MHz [186.2mm (7 5/16")] | Speaker terminals of set. | | Trimmer $CT_5$ (OSC)<br>$CT_2$ (DET)<br>$CT_1$ (ANT) | Trimmer $CT_3$ (OSC)<br>$CT_2$ (DET)<br>$CT_1$ (ANT) | Adjust for maximum output. |
| | * Use six cornered alignment tool for aligning FM OSC coil ($L_6$). | | | | | | | |
| | **FM-MONO DISTORTION ALIGNMENT** | | | | | | | |
| 9 | Connect to FM antenna terminal through FM dummy antenna (300Ω). | 98 MHz (100% Mod. with 400 Hz) | 98 MHz | Connect distortion meter to speaker terminals. | | $T_{102}$ (FM DISCRI) [Primary] | $T_{101}$ [Primary] | Adjust for minimum distortion |
| 10 | | | Point of non-interference. | Connect DC VTVM to **TP4** and **101** terminal. | Connect DC VTVM to **$TP_{101}$** and **$TP_{102}$**. | $T_{101}$ (FM DISCRI) [Secondary] | $T_{102}$ [Secondary] | Make sure that DC VTVM becomes 0V. |
| | **SIGNAL METER ALIGNMENT** | | | | | | | |
| 11 | Connect to FM antenna terminal through FM dummy antenna (300Ω). | 98 MHz (30% Mod. with 400 Hz) [Output 20dB] | 98 MHz | Signal meter of set. | | $T_{104}$ | $T_{103}$ | Adjust for maximum indication. |
| 12 | | | | | | $T_{103}$ | | Adjust for minimum indication. |
| 13 | | 98 MHz (30% Mod. with 400Hz) [Output 60dB] | 98 MHz | Signal meter of set. | | $VR_{102}$ | | Adjust for about 4.7 point of signal meter indication. |
| | **MUTING LEVEL ALIGNMENT.....Only Model SA-5350** | | | | | | | |
| | **Note :** FM muting switch to ON position. | | | | | | | |
| 14 | Connect to FM antenna terminal through FM dummy antenna (300Ω). | 98 MHz 100% Mod. with 400Hz) [Output 28dB, IHF] | 98 MHz (Input Level 16dB) | Speaker terminals of set. | | $VR_{101}$ | | Adjust so that output can be obtained. |

| | FM MPX PILOT ALIGNMENT | |
|---|---|---|
| | When use the frequency counter | When not use the frequency counter |
| 15 | ① 98 MHz Non-modulation mono signal applied to set.<br>② Connect the frequency counter through 100 kΩ resistor to **TP3 (SA-5350)** [TP103 **(SA-5150)**], Common to chassis.<br>③ Adjust VR103 to 19 kHz±100 Hz. | ① Stereo signal applied to set or receive the FM stereo station.<br>② Adjust VR103 to lighting point of stereo indicator and sement contactor of VR103 as shown fig. 1. |

**Notes :**

Stereo-modulator ..... Connect stereo-modulator output to EXT. MOD. terminal of signal generator.
Inter OSC ..... 1 kHz  Pilot signal modulation ..... 10%

Signal generator ..... Frequency approximately/98 MHz, Output level/72dB (IHF), Modulation mode to FM

1. Selector switch ..... FM Auto
2. Balance control ..... Center
3. Mode switch ..... stereo
4. Maintain line voltage at rated voltage.

| | SIGNAL GENERATOR CONNECTION | STEREO MODULATOR MODE and MOD. RATE | INDICATOR (VTVM or SCOPE) | ADJUSTMENT POINTS SA-5350 | ADJUSTMENT POINTS SA-5150 | REMARKS |
|---|---|---|---|---|---|---|
| | **STEREO INDICATOR LIGHTING LEVEL ALIGNMENT ..... Only Model SA-5150** | | | | | |
| 16 | FM antenna terminal through dummy antenna. (Output 30dB/IHF). | Pilot signal to ON (L+R) | Stereo indicator (Stereo Eye) of set. | VR101 | | Stop turning immediately when the stereo eye light up for optimum adjustment. |
| | **SEPARATION ALIGNMENT** | | | | | |
| 17 | FM antenna terminal through dummy antenna. | L (and R) 30% Mnd. | VTVM across speaker terminals through low pass filter. Refer to fig. 2. | VR104 | | Adjust for minimum right (and left) output. |

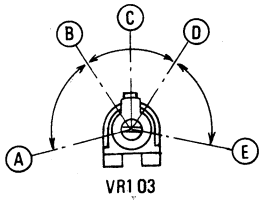


**A~B, D~E:** Stereo OFF Position.
**B~D:** Stereo ON Position (Indicator Lighting)
**C:** Adjust Point of Pilot Circuit.

**Fig. 1**

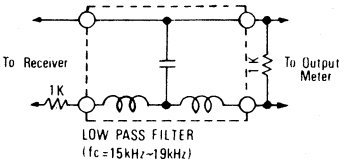


**Fig. 2**

## ■ Model SA-5350 ALIGNMENT POINTS

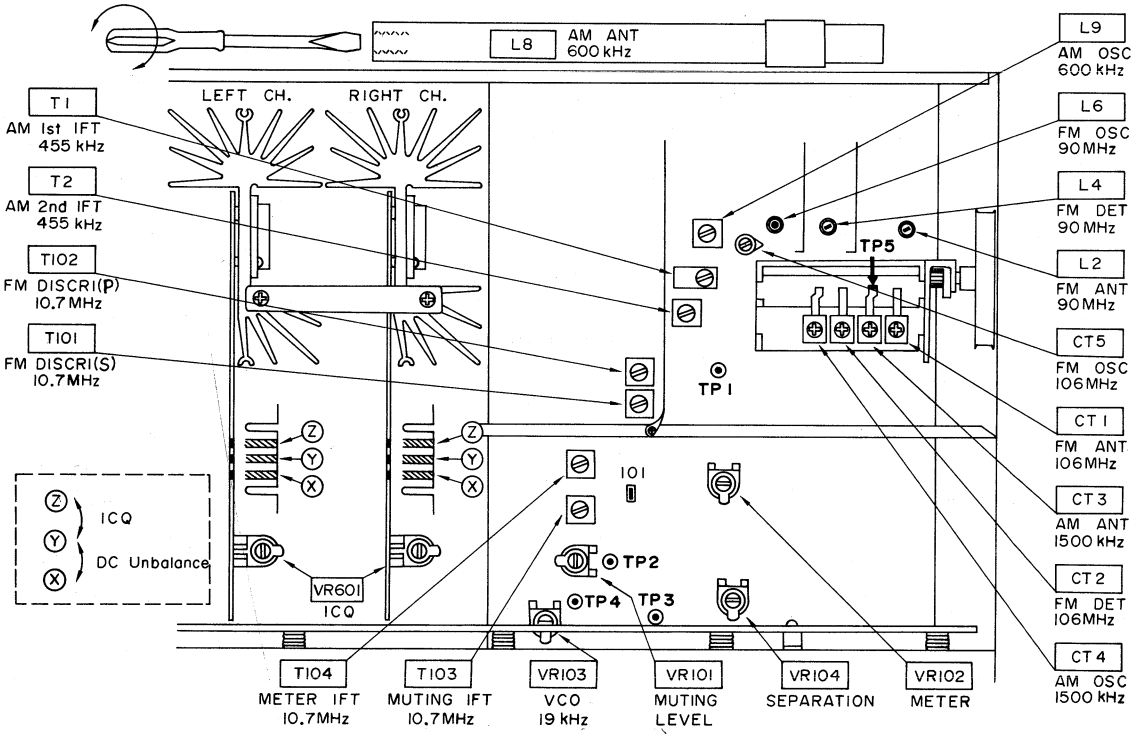

■ **Model SA-5150**

## ALIGNMENT POINTS

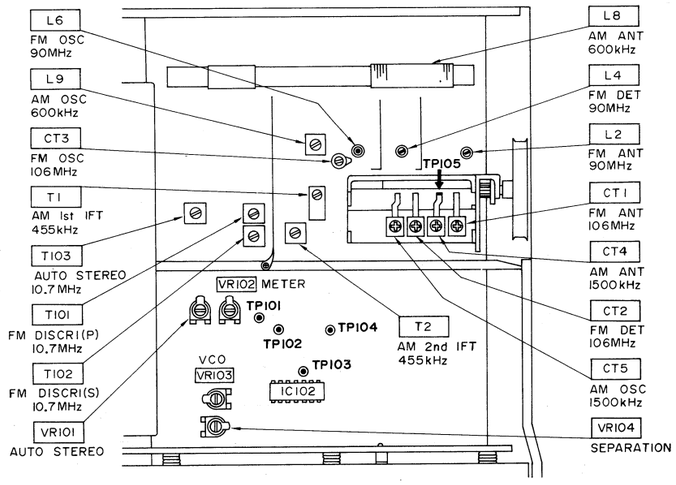


■ **Model SA-5350** **POWER SOURCE & TONE CONTROL CIRCUIT BOARD**

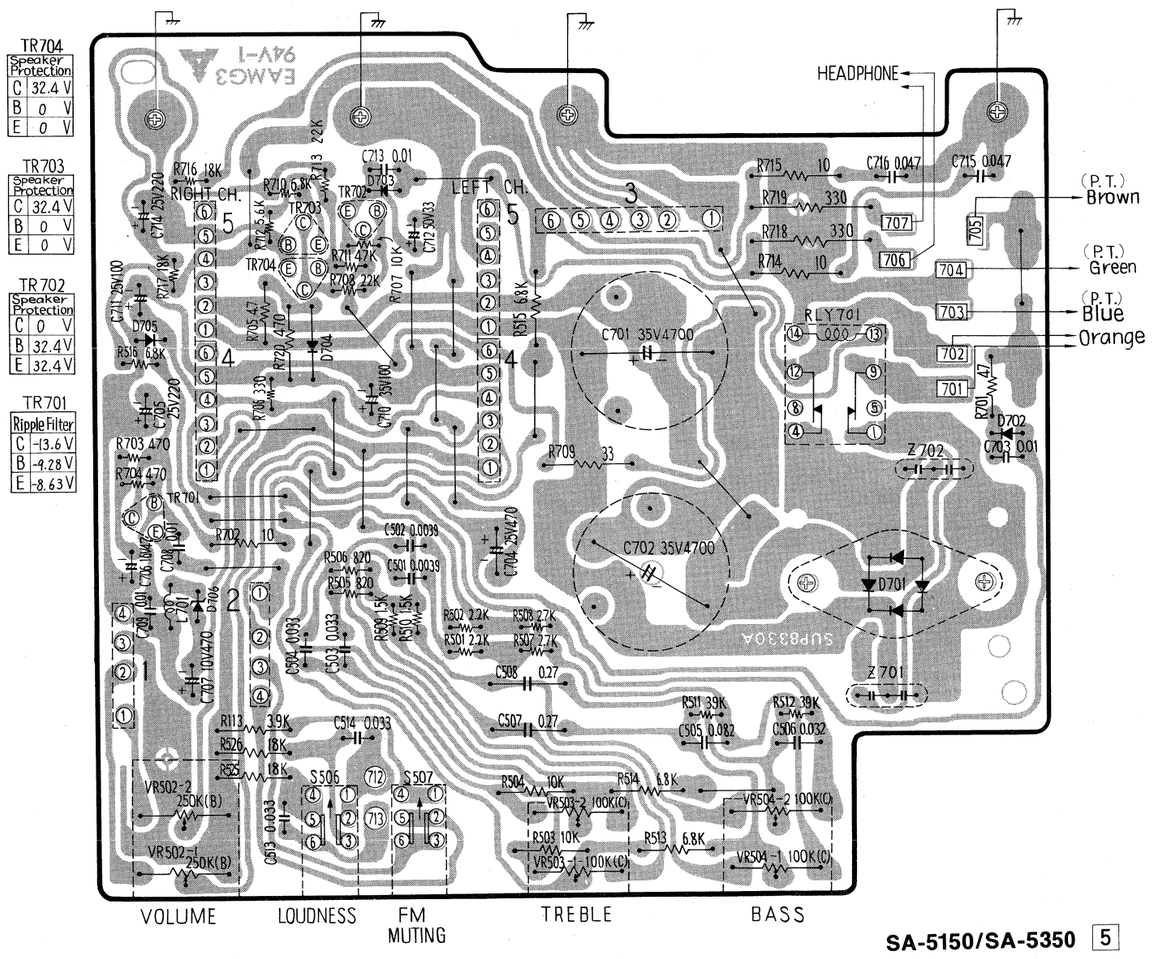




■ **Model SA-5350** **MAIN AMPLIFIER CIRCUIT BOARD...L ch. or R ch.**

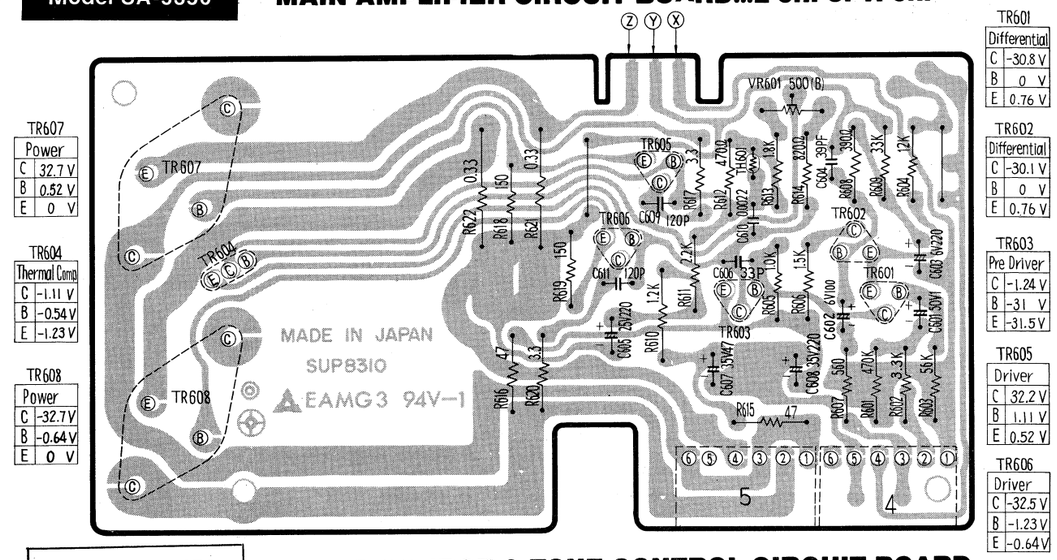


■ **Model SA-5150** **POWER SOURCE & TONE CONTROL CIRCUIT BOARD**

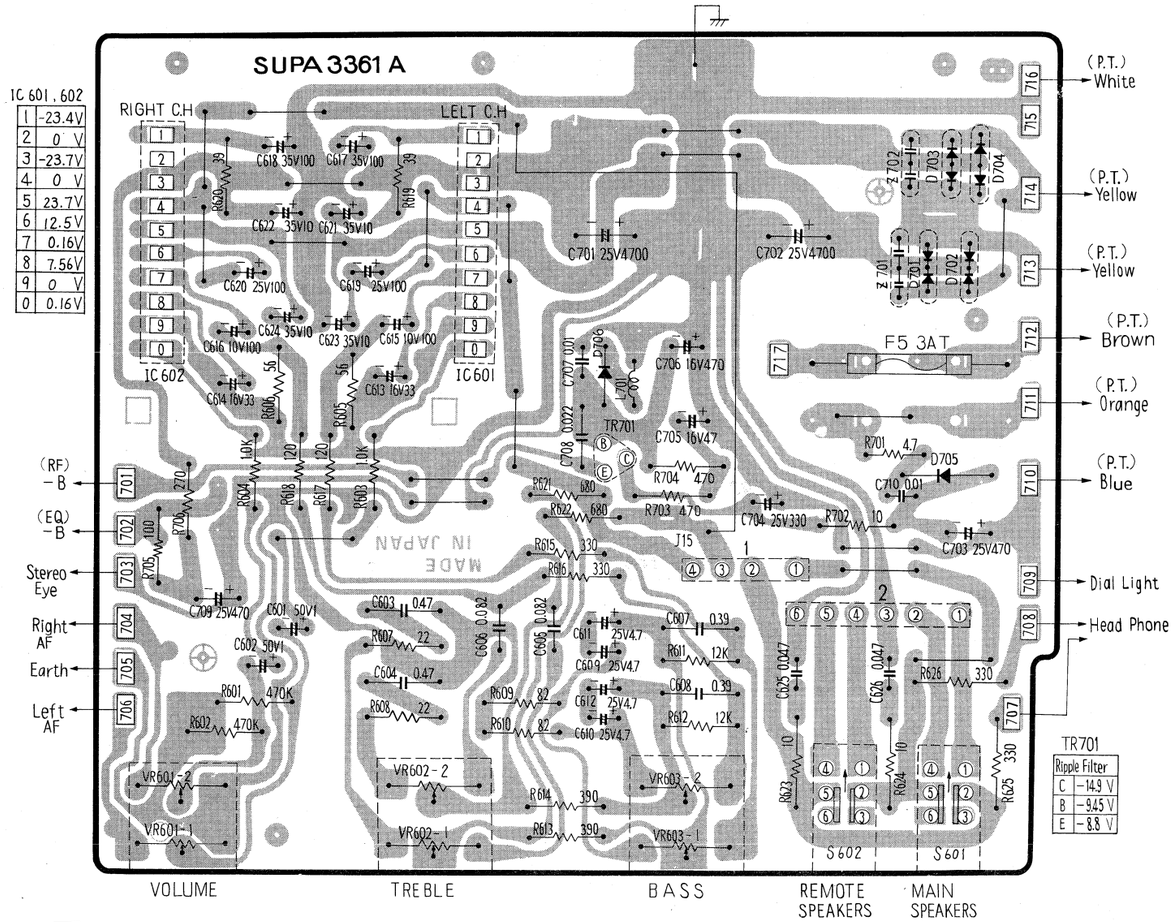

■ **Model SA-5350** **FM/AM TUNER, AF AMPLIFIER & EQUALIZER CIRCUIT BOARD (Bottom View)**

Printed Resistor
Circuit View on Top of P.C.B.

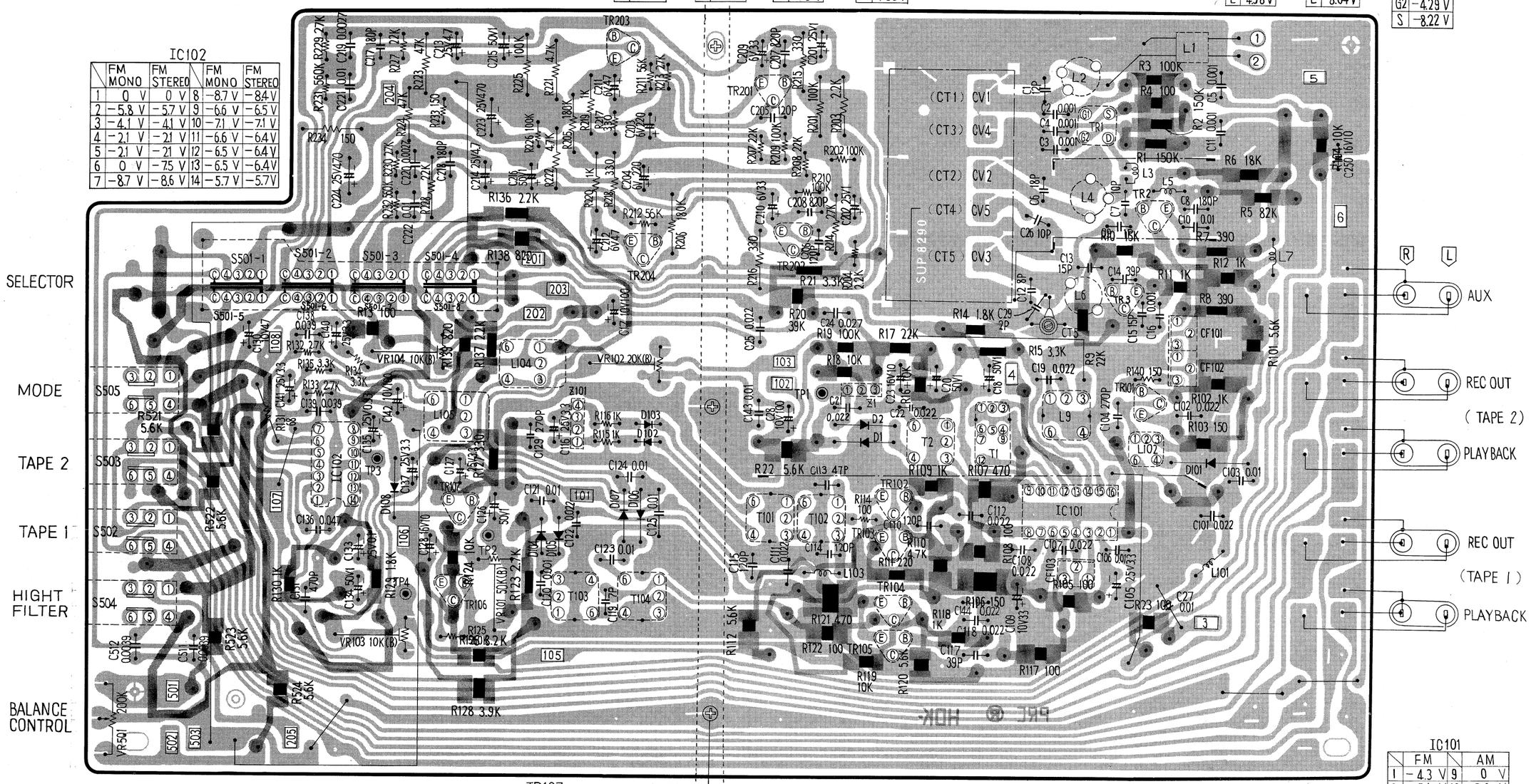


| | AF |
|---|---|
| C | 8.11 V |
| B | 16.8 V |
| E | 17.5 V |

| | AF |
|---|---|
| C | 8.44 V |
| B | 16.7 V |
| E | 17.6 V |

| | AF |
|---|---|
| C | 16.8 V |
| B | 1.82 V |
| E | 1.3 V |

| | AF |
|---|---|
| C | 16.7 V |
| B | 1.8 V |
| E | 1.33 V |

TR3

| | FM |
|---|---|
| C | 0 V |
| B | -3.87 V |
| E | -4.58 V |

| | FM |
|---|---|
| C | -0.54 V |
| B | -7.32 V |
| E | -8.04 V |

TR1

| | FM |
|---|---|
| D | 0 V |
| G1 | -8.58 V |
| G2 | -4.29 V |
| S | -8.22 V |

IC102

| | FM MONO | FM STEREO | | FM MONO | FM STEREO |
|---|---|---|---|---|---|
| 1 | 0 V | 0 V | 8 | -8.7 V | -8.4 V |
| 2 | -5.8 V | -5.7 V | 9 | -6.6 V | -6.5 V |
| 3 | -4.1 V | -4.1 V | 10 | -7.1 V | -7.1 V |
| 4 | -2.1 V | -2.1 V | 11 | -6.6 V | -6.4 V |
| 5 | -2.1 V | -2.1 V | 12 | -6.5 V | -6.4 V |
| 6 | 0 V | -7.5 V | 13 | -6.5 V | -6.4 V |
| 7 | -8.7 V | -8.6 V | 14 | -5.7 V | -5.7 V |

TR107

| | MUT-ON | MUT-OFF |
|---|---|---|
| C | -2.51 V | -0.05 V |
| B | -7.9 V | -8.53 V |
| E | -8.58 V | -8.53 V |

TR106

| | FM |
|---|---|
| C | -8.54 V |
| B | -7.94 V |
| E | -8.58 V |

TR105

| | FM |
|---|---|
| C | 0 V |
| B | -3.49 V |
| E | -4.2 V |

TR104

| | FM |
|---|---|
| C | -0.71 |
| B | -3.47 |
| E | -4.2 |

TR103

| | MUT OFF |
|---|---|
| C | -0.5 V |
| B | -6.2 V |
| E | -6.9 V |

TR102

| | MUT OFF |
|---|---|
| C | 0 V |
| B | -6.2 V |
| E | -6.9 V |

TR101

| | FM |
|---|---|
| C | 0 V |
| B | -7.27 V |
| E | -7.98 V |

IC101

| | FM | | AM |
|---|---|---|---|
| 1 | -4.3 V | 9 | 0 V |
| 2 | -5.1 V | 10 | -3.6 V |
| 3 | -3.2 V | 11 | -5.1 V |
| 4 | 0 V | 12 | 0 V |
| 5 | -4.9 V | 13 | -2.4 V |
| 6 | -5.9 V | 14 | -3.5 V |
| 7 | -4.7 V | 15 | 0 V |
| 8 | -0.6 V | 16 | -4.4 V |

# Schematic Diagram ..... Model SA-5350

(This schematic diagram may be modified at any time wi

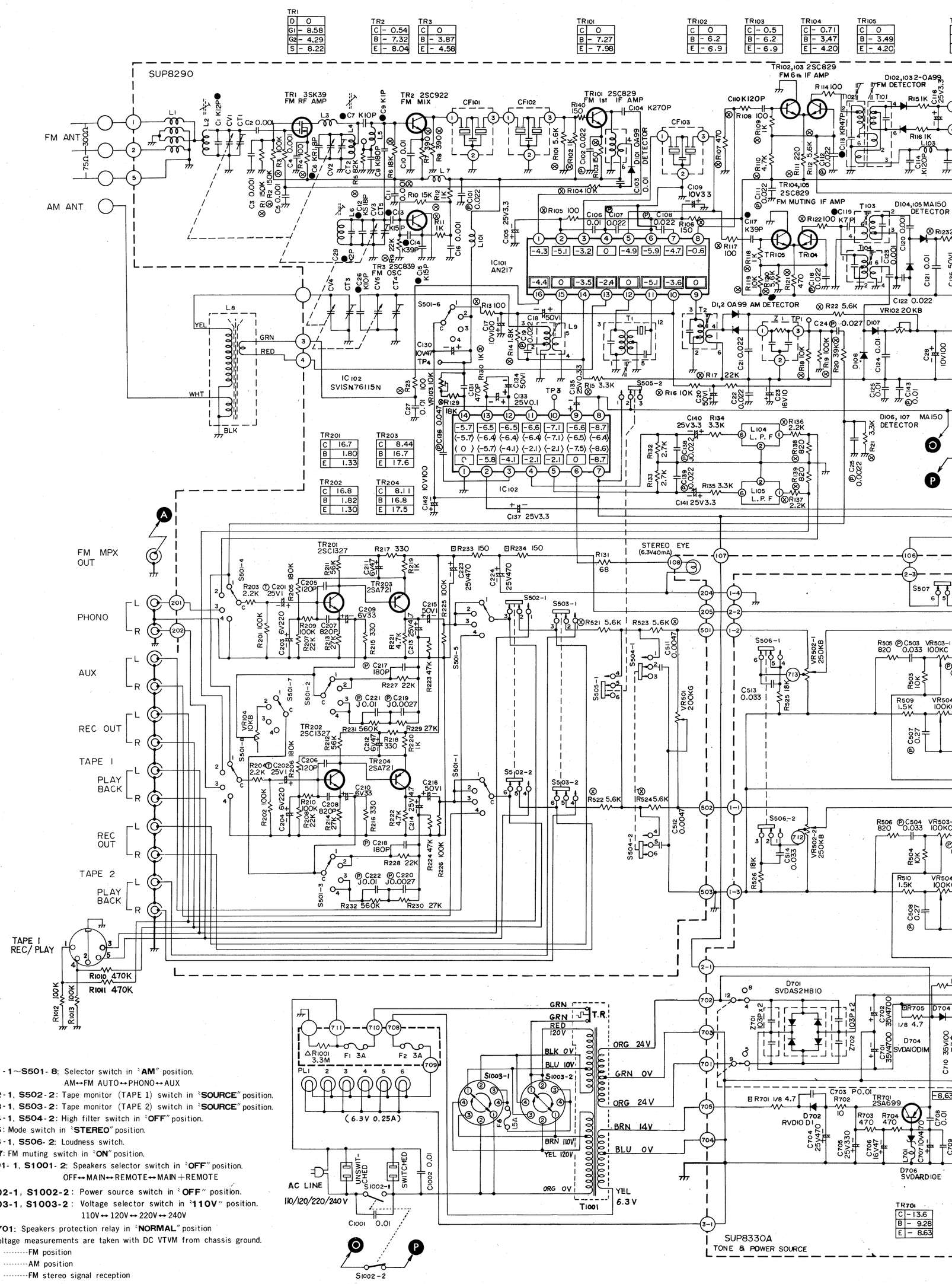


Notes:

1. **S501-1~S501-8**: Selector switch in "**AM**" position.
   AM↔FM AUTO↔PHONO↔AUX
2. **S502-1, S502-2**: Tape monitor (TAPE 1) switch in "**SOURCE**" position.
3. **S503-1, S503-2**: Tape monitor (TAPE 2) switch in "**SOURCE**" position.
4. **S504-1, S504-2**: High filter switch in "**OFF**" position.
5. **S505**: Mode switch in "**STEREO**" position.
6. **S506-1, S506-2**: Loudness switch.
7. **S507**: FM muting switch in "**ON**" position.
8. **S1001-1, S1001-2**: Speakers selector switch in "**OFF**" position.
   OFF↔MAIN↔REMOTE↔MAIN+REMOTE
9. **S1002-1, S1002-2**: Power source switch in "**OFF**" position.
10. **S1003-1, S1003-2**: Voltage selector switch in "**110V**" position.
    110V↔120V↔220V↔240V
11. **RLY701**: Speakers protection relay in "**NORMAL**" position
12. DC voltage measurements are taken with DC VTVM from chassis ground.

▭ ·····FM position
▭ ·····AM position
〈 〉 ·····FM stereo signal reception

may be modified at any time with the development of new technology.)

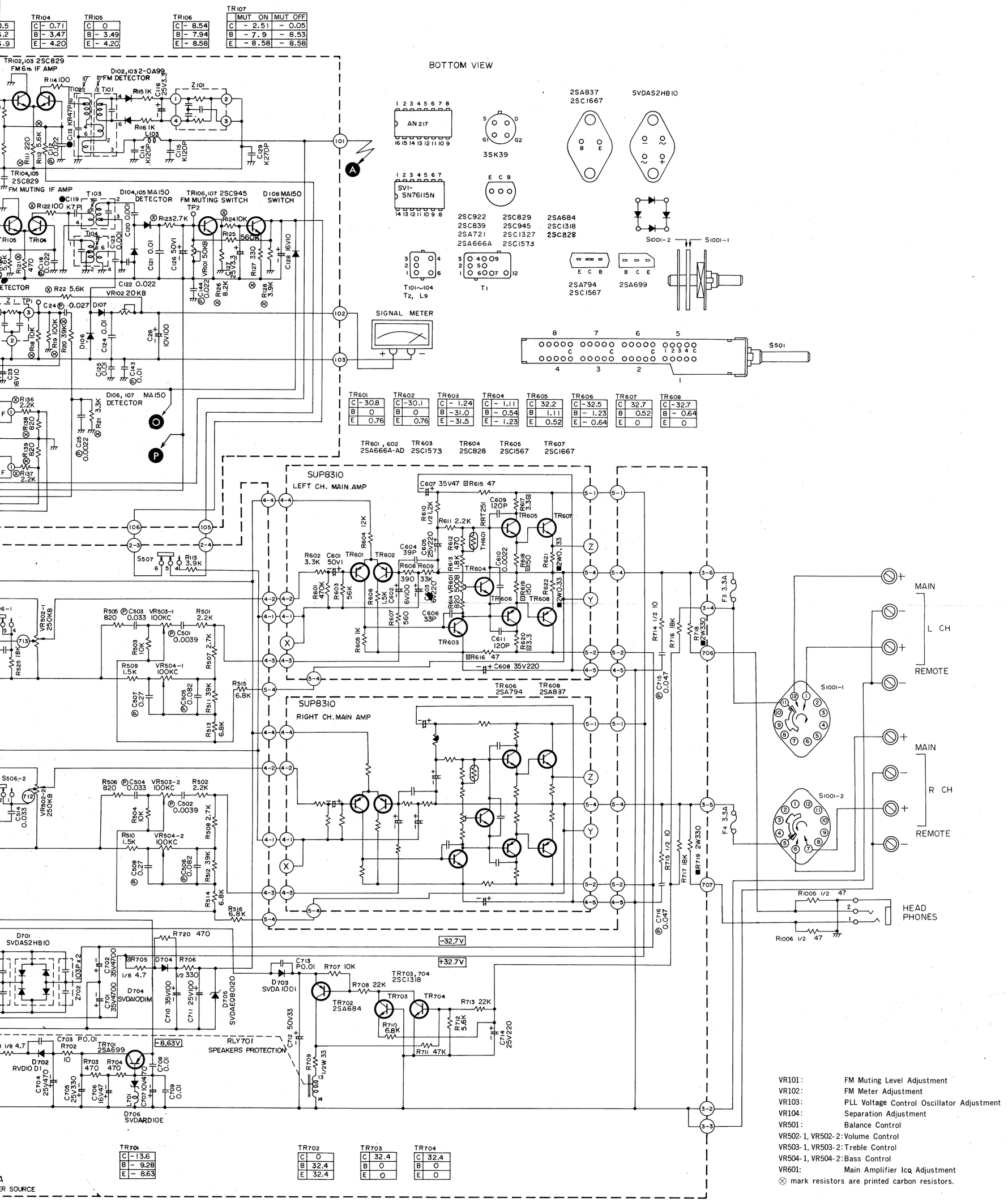


| TR104 | |
|---|---|
| C | -0.71 |
| B | -3.47 |
| E | -4.20 |

| TR105 | |
|---|---|
| C | 0 |
| B | -3.49 |
| E | -4.20 |

| TR106 | |
|---|---|
| C | -8.54 |
| B | -7.94 |
| E | -8.58 |

| TR107 | MUT ON | MUT OFF |
|---|---|---|
| C | -2.51 | -0.05 |
| B | -7.9 | -8.53 |
| E | -8.58 | -8.58 |

| TR601 | |
|---|---|
| C | -30.8 |
| B | 0 |
| E | 0.76 |

| TR602 | |
|---|---|
| C | -30.1 |
| B | 0 |
| E | 0.76 |

| TR603 | |
|---|---|
| C | -1.24 |
| B | -31.0 |
| E | -31.5 |

| TR604 | |
|---|---|
| C | -1.11 |
| B | -0.54 |
| E | -1.23 |

| TR605 | |
|---|---|
| C | 32.2 |
| B | 1.11 |
| E | 0.52 |

| TR606 | |
|---|---|
| C | -32.5 |
| B | -1.23 |
| E | -0.64 |

| TR607 | |
|---|---|
| C | 32.7 |
| B | 0.52 |
| E | 0 |

| TR608 | |
|---|---|
| C | -32.7 |
| B | -0.64 |
| E | 0 |

TR601, 602 2SA666A-AD TR603 2SC1573 TR604 2SC828 TR605 2SC1567 TR607 2SC1667

| TR701 | |
|---|---|
| C | -13.6 |
| B | -9.28 |
| E | -8.63 |

| TR702 | |
|---|---|
| C | 0 |
| B | 32.4 |
| E | 32.4 |

| TR703 | |
|---|---|
| C | 32.4 |
| B | 0 |
| E | 0 |

| TR704 | |
|---|---|
| C | 32.4 |
| B | 0 |
| E | 0 |

VR101: FM Muting Level Adjustment
VR102: FM Meter Adjustment
VR103: PLL Voltage Control Oscillator Adjustment
VR104: Separation Adjustment
VR501: Balance Control
VR502-1, VR502-2: Volume Control
VR503-1, VR503-2: Treble Control
VR504-1, VR504-2: Bass Control
VR601: Main Amplifier Icq Adjustment
⊗ mark resistors are printed carbon resistors.

with the development of new technology.)

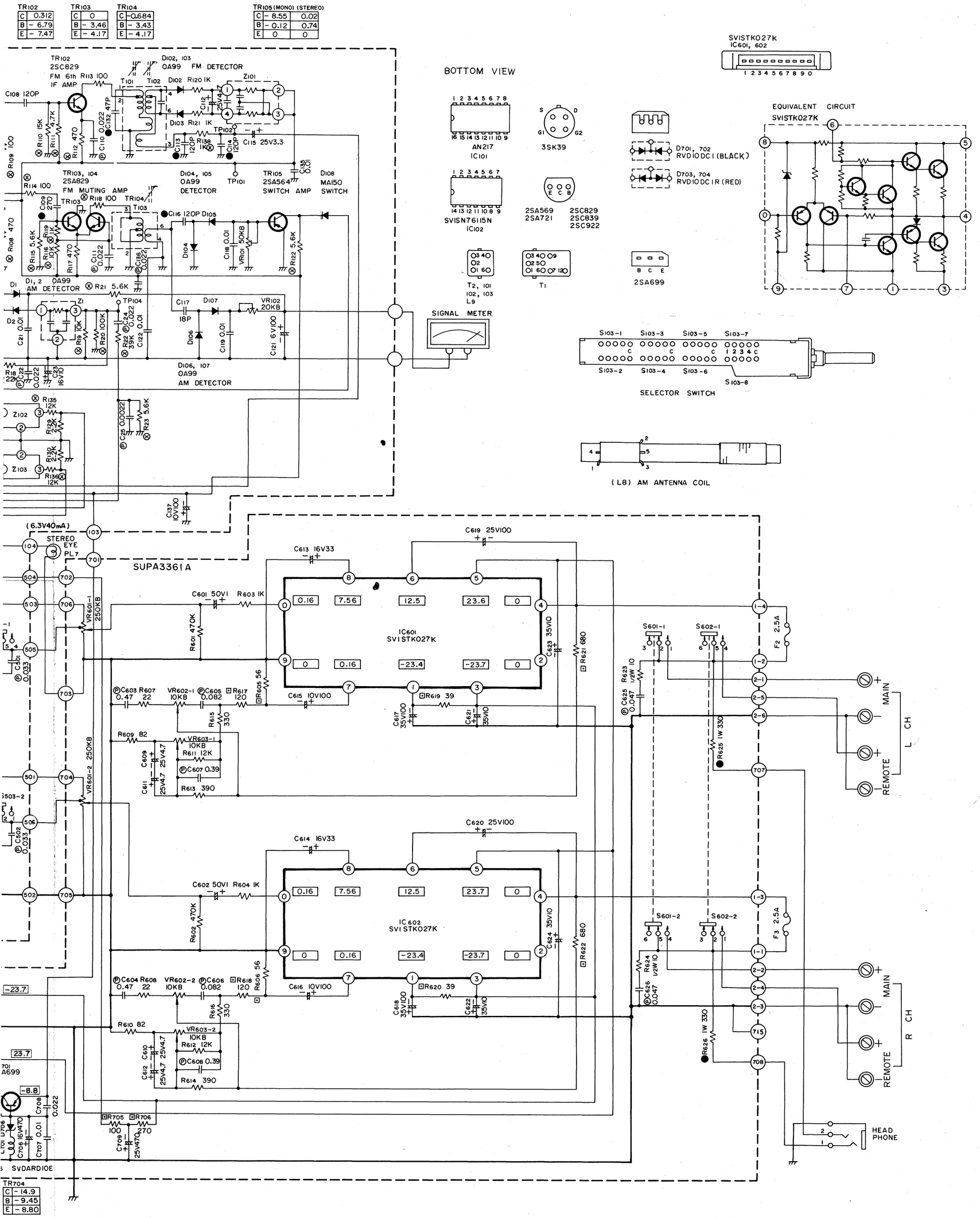

# Schematic Diagram ..... Model SA-5150

(This schematic diagram may be modified at any time with the development o

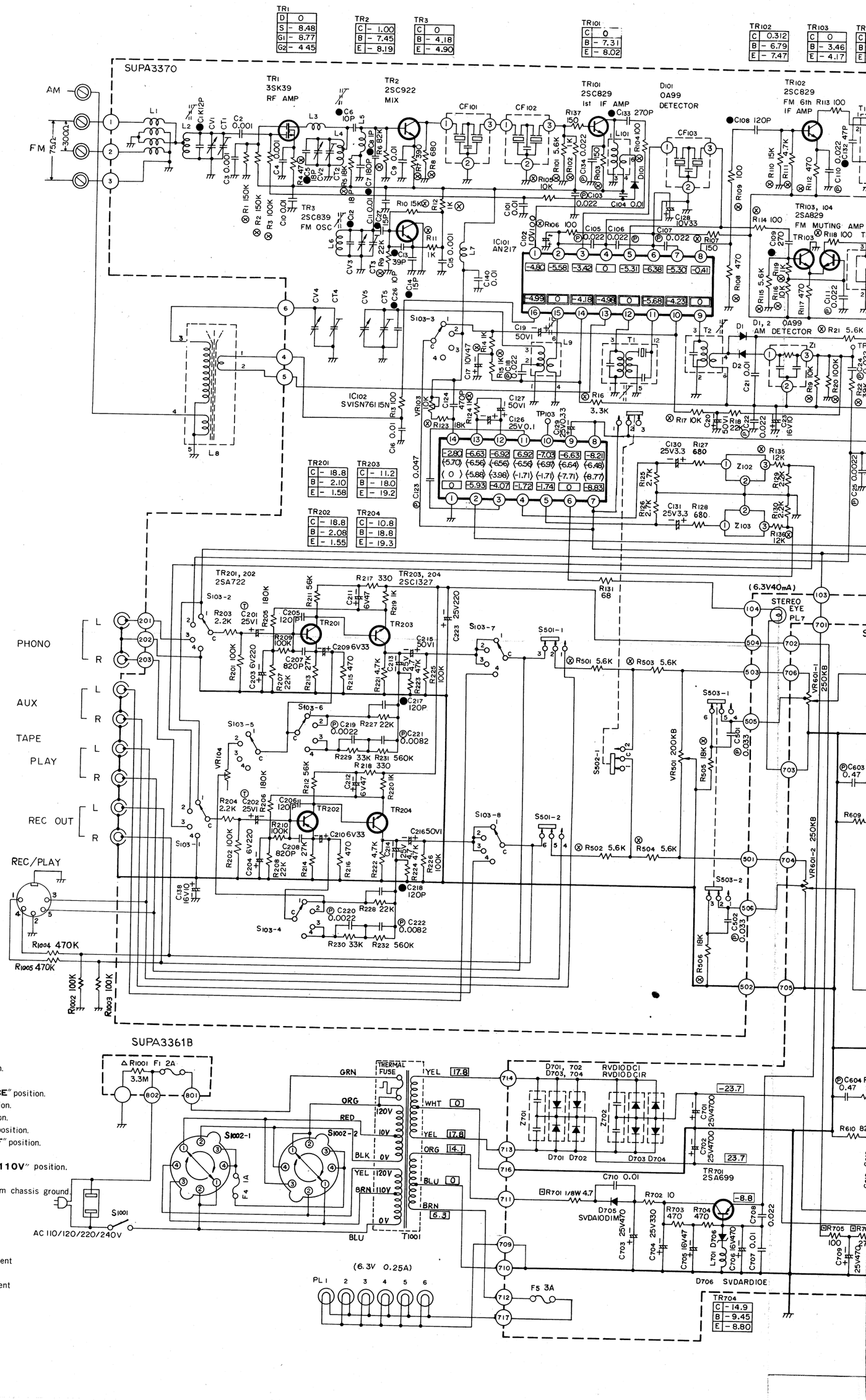


Notes :

1. **S103-1~S103-8**: Selector switch in "**AM**" position.
   AM ↔ FM AUTO ↔ PHONO ↔ AUX
2. **S501-1, S501-2**: Tape monitor switch in "**SOURCE**" position.
3. **S502-1, S502-2**: Mode switch in "**STEREO**" position.
4. **S503-1, S503-2**: Loudness switch in "**OFF**" position.
5. **S601-1, S601-2**: Main speakers switch in "**OFF**" position.
6. **S602-1, S602-2**: Remote speakers switch in "**OFF**" position.
7. **S1001**: Power source switch in "**OFF**" position.
8. **S1002-1, S1002-2**: Voltage selector switch in "**110V**" position.
   110V ↔ 120V ↔ 220V ↔ 240V
9. DC voltage measurements are taken with DC VTVM from chassis ground.
   ▭ ·····FM position
   ▭ ·····AM position
   〈 〉 ·····FM stereo signal reception

VR101: Stereo Indicator Lighting Level Adjustment
VR102: FM Meter Adjustment
VR103: PLL Voltage Control Oscillator Adjustment
VR104: Separation Adjustment
VR501: Balance Control
VR601-1, VR601-2: Volume Control
VR602-1, VR602-2: Treble Control
VR603-1, VR603-2: Bass Control
⊗ mark resistors are printed carbon resistors.

■ **Model SA-5150** **FM/AM TUNER, AF AMPLIFIER & EQUALIZER CIRCUIT BOARD (Bottom View)**

Printed Resistor
Circuit View on Top of P.C.B.

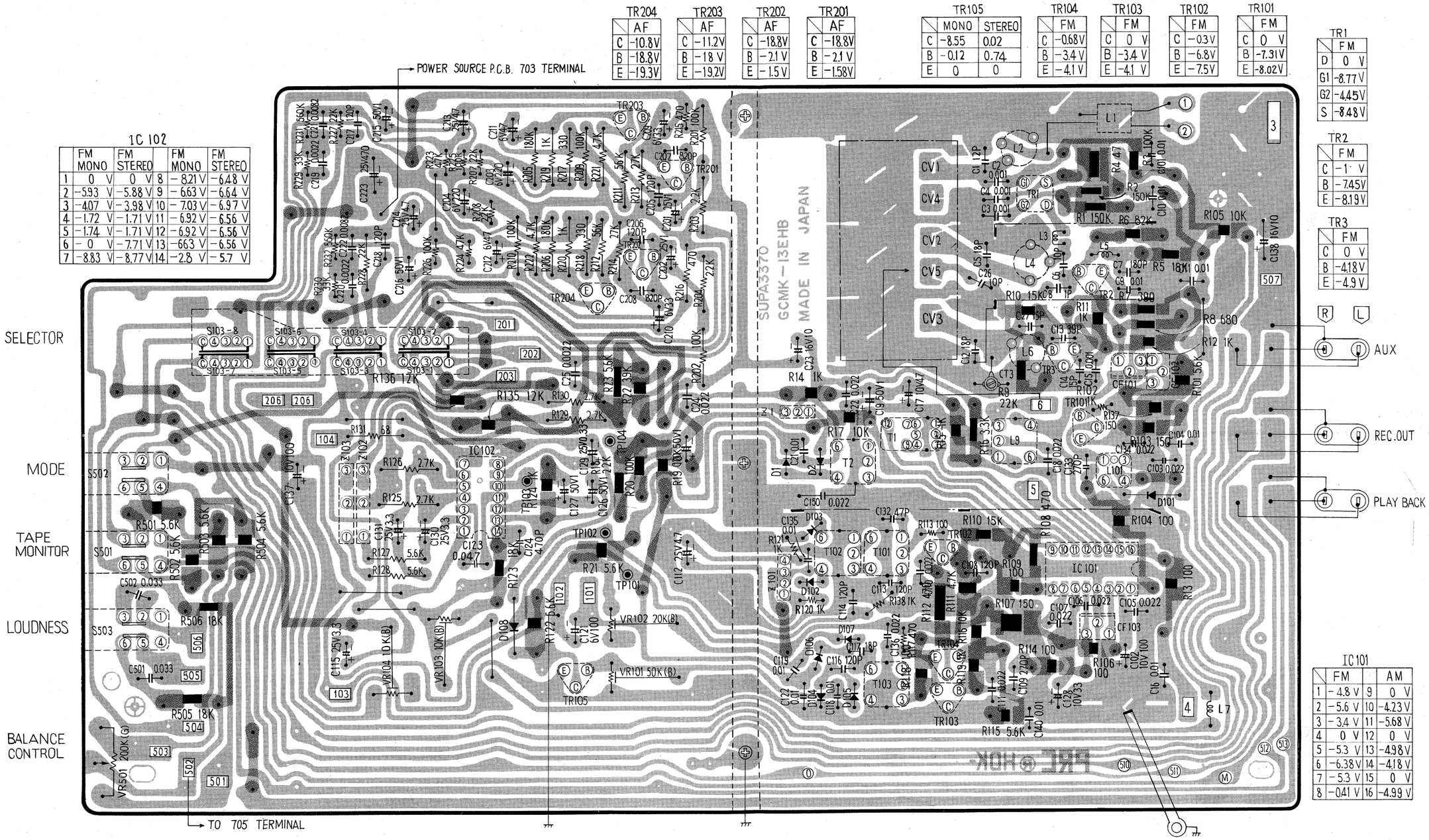


| TR204 | AF |
|---|---|
| C | -10.8V |
| B | -18.8V |
| E | -19.3V |

| TR203 | AF |
|---|---|
| C | -11.2V |
| B | -18 V |
| E | -19.2V |

| TR202 | AF |
|---|---|
| C | -18.8V |
| B | -2.1 V |
| E | -1.5 V |

| TR201 | AF |
|---|---|
| C | -18.8V |
| B | -2.1 V |
| E | -1.58V |

| TR105 | MONO | STEREO |
|---|---|---|
| C | -8.55 | 0.02 |
| B | -0.12 | 0.74 |
| E | 0 | 0 |

| TR104 | FM |
|---|---|
| C | -0.68V |
| B | -3.4 V |
| E | -4.1 V |

| TR103 | FM |
|---|---|
| C | 0 V |
| B | -3.4 V |
| E | -4.1 V |

| TR102 | FM |
|---|---|
| C | -0.3V |
| B | -6.8V |
| E | -7.5V |

| TR101 | FM |
|---|---|
| C | 0 V |
| B | -7.31V |
| E | -8.02V |

| TR1 | FM |
|---|---|
| D | 0 V |
| G1 | -8.77V |
| G2 | -4.45V |
| S | -8.48V |

| TR2 | FM |
|---|---|
| C | -1 V |
| B | -7.45V |
| E | -8.19V |

| TR3 | FM |
|---|---|
| C | 0 V |
| B | -4.18V |
| E | -4.9 V |

IC 102

| | FM MONO | FM STEREO | | FM MONO | FM STEREO |
|---|---|---|---|---|---|
| 1 | 0 V | 0 V | 8 | -8.21 V | -6.48 V |
| 2 | -5.93 V | -5.88 V | 9 | -6.63 V | -6.64 V |
| 3 | -4.07 V | -3.98 V | 10 | -7.03 V | -6.97 V |
| 4 | -1.72 V | -1.71 V | 11 | -6.92 V | -6.56 V |
| 5 | -1.74 V | -1.71 V | 12 | -6.92 V | -6.56 V |
| 6 | -0 V | -7.71 V | 13 | -6.63 V | -6.56 V |
| 7 | -8.83 V | -8.77 V | 14 | -2.8 V | -5.7 V |

IC 101

| | FM | | AM |
|---|---|---|---|
| 1 | -4.8 V | 9 | 0 V |
| 2 | -5.6 V | 10 | -4.23 V |
| 3 | -3.4 V | 11 | -5.68 V |
| 4 | 0 V | 12 | 0 V |
| 5 | -5.3 V | 13 | -4.98 V |
| 6 | -6.38 V | 14 | -4.18 V |
| 7 | -5.3 V | 15 | 0 V |
| 8 | -0.41 V | 16 | -4.99 V |

## ■ CABINET & CHASSIS PARTS LOCATIONS

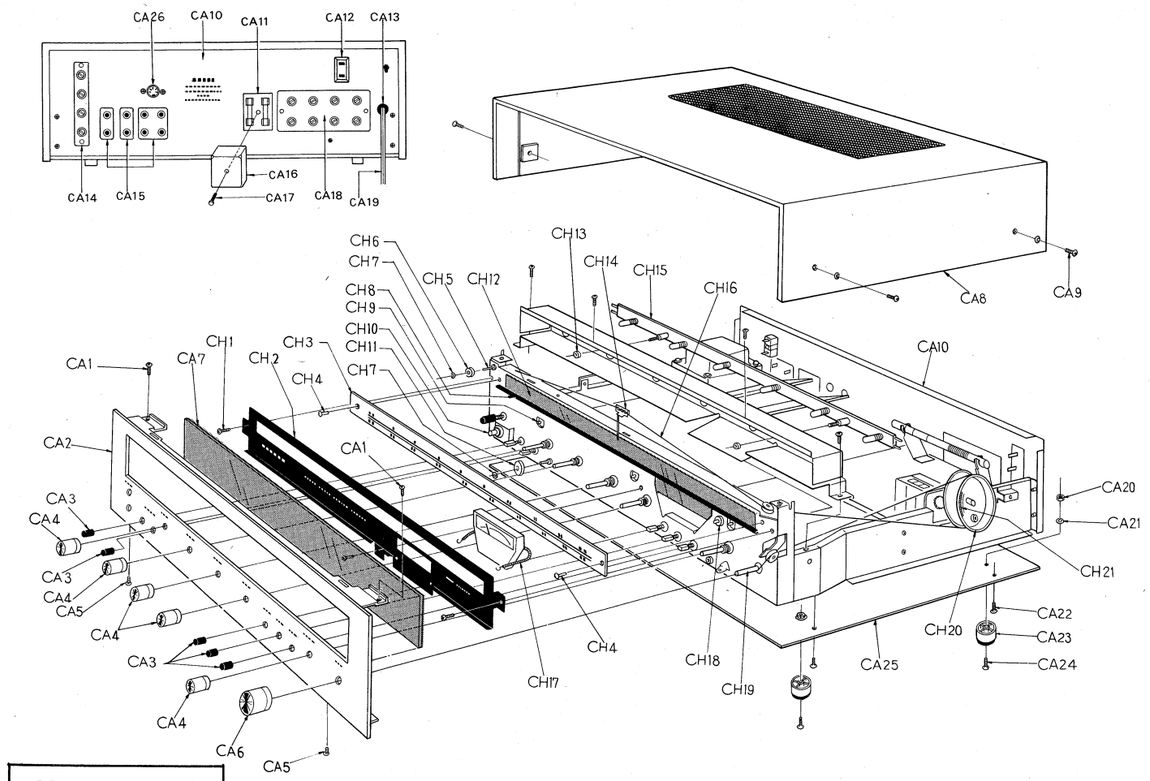


**Model SA-5150**

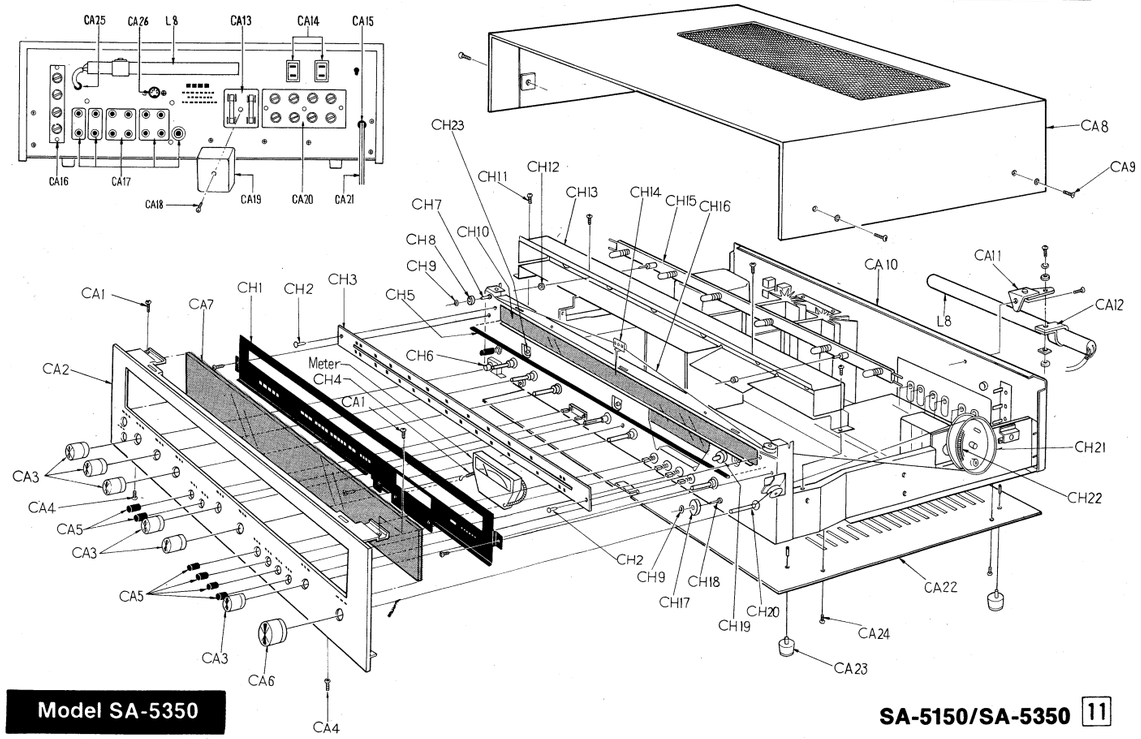


**Model SA-5350**



## ■ AC FUSE CIRCUIT BOARD

**Model SA-5150**

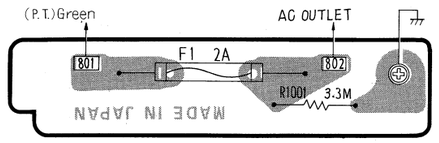


**Model SA-5350**

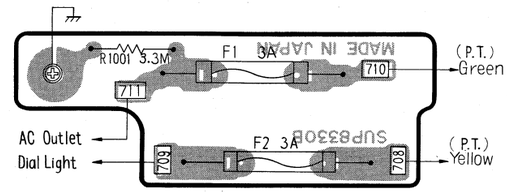


■ **Model SA-5150** **Model SA-5350**

## ACCESSORIES

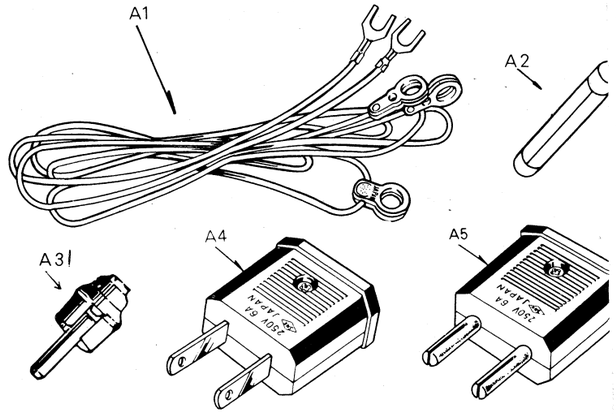


■ **Model SA-5150** **Model SA-5350**

## PACKING PARTS

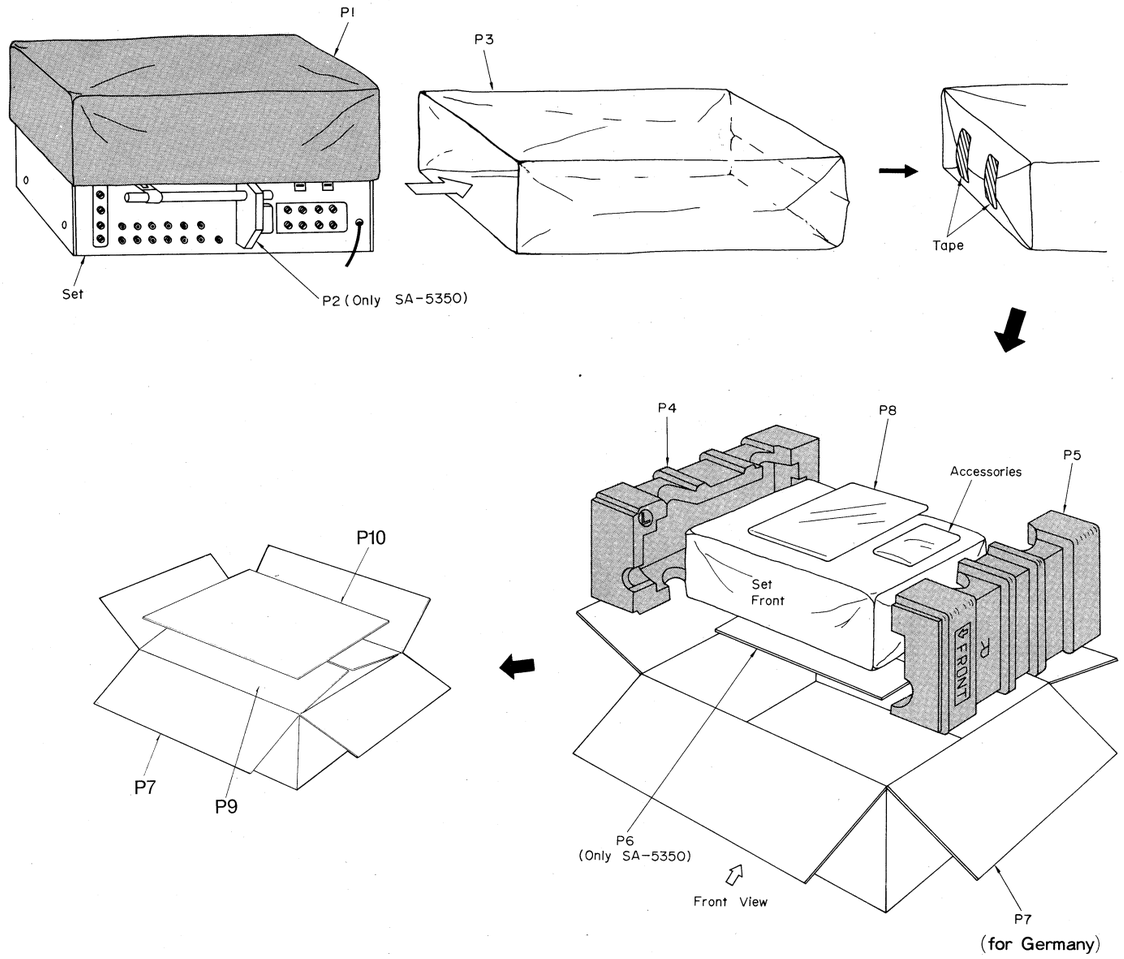

## ■ Model SA-5350 REPLACEMENT PARTS LIST

**NOTES:**

1. Part numbers are indicated on most mechanical parts. Please use this part number, for parts orders.

| Ref. No. | Part No. | Description | Per Set (Pcs.) | Remarks |
|---|---|---|---|---|
| **INTEGRATED CIRCUITS** | | | | |
| IC101 | AN217BB | FM IF, AM RF & AM IF Amplifier | 1 | |
| IC102 | SVISN76115N | PLL Type FM MPX | 1 | |
| **TRANSISTORS** | | | | |
| TR1 | 3SK39-Q | FM RF Amplifier | 1 | |
| TR2 | 2SC922-M | FM Mixer | 1 | |
| TR3 | 2SC839-H | FM Oscillator | 1 | |
| TR101, 102, 103, 104, 105 | 2SC829-C | FM IF Amplifier | 5 | |
| TR106, 107 | 2SC945-P2 | FM Muting Switching | 2 | |
| TR201, 202 | 2SC1327-T | Equalizer Amplifier | 2 | |
| TR203, 204 | 2SA721-T | Equalizer Amplifier | 2 | |
| TR(601,602)×2 | 2SA666A-AD3 | Differential Amplifier | 4 | |
| TR (603) ×2 | 2SC1573-Q | Pre Driver Amplifier | 2 | |
| TR (604) ×2 | 2SC828-R | Thermo Compensation | 2 | |
| TR (605) ×2 | 2SC1567-R | Driver Amplifier } Use in Pairs | 2 | |
| TR (606) ×2, | 2SA794-R | Driver Amplifier } Use in Pairs | 2 | |
| TR (607) ×2 | 2SC1667Ⓢ-Q | Power Amplifier } Use in Pairs | 2 | |
| TR (608) ×2 | 2SA837Ⓢ-Q | Power Amplifier } Use in Pairs | 2 | |
| TR701 | 2SA699-R | Ripple Filter | 1 | |
| TR702 | 2SA684-Q | Speaker Protection Relay Switching | 1 | |
| TR703, 704 | 2SC1318-R | Speaker Protection Relay Switching | 2 | |
| **DIODES** | | | | |
| D1, 2, 101 | OA99 | AM & FM AGC Detector | 3 | |
| D102, 103 | 2-OA99 | FM Discriminator | 1 pair | |
| D104, 105, 106, 107, 108 | MA150 | FM Muting & Meter Detector | 5 | |
| D701 | SVDAS2HB10 | Rectifier | 1 | |
| D702, 703 | RVD10D1 | Rectifier | 2 | |
| D704 | SVDA10D1M | Rectifier | 1 | |
| D705 | SVDAEQB0120 | 20V Zener | 1 | ○ |
| D706 | SVDARD10E | 10V Zener | 1 | |
| **THERMISTORS** | | | | |
| TH (601) ×2 | RRT251 | Driver Circuit | 2 | |
| **COILS and TRANSFORMERS** | | | | |
| L1 | SLAA4W1-3 | FM Balun Coil | 1 | |
| L2 | SLAA4N9 | FM Antenna Coil | 1 | |
| L3 | RLQY25S5 | Choke Coil | 1 | |
| L4 | SLDA4N18 | FM DET Coil | 1 | |
| L5 | RLQY15G5 | Choke Coil | 1 | |
| L6 | SLOA4N9 | FM OSC Coil | 1 | |
| L7, 101, 103 | SLQX101-2D | Choke Coil | 3 | |
| L8 | SLFA2E22 | AM Antenna Coil | 1 | ○ |
| L9 | SLOA2C6 | AM OSC Coil | 1 | |
| L102 | SLIA4B1 | FM AGC Coil | 1 | |
| L104, 105 | SLM1Z7-K | Low Pass Filter | 2 | ○ |
| L701 | SLQX101-2D | Choke Coil | 1 | |
| T1 | RLI7W105S-T | FM 1st IF Transformer | 1 | |
| T2 | RLI2C450P-T | AM 2nd IF Transformer | 1 | |
| T102 | SLIA4C541 | FM Discriminator, Primary | 1 | |
| T101 | SLIA4C56 | FM Discriminator, Secondary | 1 | |
| T103, 104 | SLIA4C241-T | FM Muting & Meter IFT | 2 | |
| T1001 | SLT5Q7 | Power Transformer | 1 | ○ |
| **CERAMIC FILTERS** | | | | |
| CF101, 102, 103 | SVF107MA8A | FM IF Circuit, Red, 10.7MHz | each 3 | |
| | SVF107MA8B | FM IF Circuit, Blue, 10.67MHz | | |
| | SVF107MA8C | FM IF Circuit, Orange, 10.73MHz | | |
| | SVF107MA8D | FM IF Circuit, Black, 10.64MHz | | |
| | SVF107MA8E | FM IF Circuit, White, 10.76MHz | | |
| **RESISTORS** | | | | |
| R131 | ERD14TJ660 | 68Ω, ¼W, ±5%, Carbon | 1 | |
| R234 | ERD14TJ151 | 150Ω, ¼W, ±5%, Carbon | 1 | |
| R215, 216, 218 | ERD14TJ331 | 330Ω, ¼W, ±5%, Carbon | 3 | |
| R (608) ×2 | ERD14TJ391 | 390Ω, ¼W, ±5%, Carbon | 2 | |
| R (612) ×2, 720 | ERD14TJ471 | 470Ω, ¼W, ±5%, Carbon | 3 | |
| R (607) ×2 | ERD14TJ561 | 560Ω, ¼W, ±5%, Carbon | 2 | |
| R (614) ×2 | ERD14TJ821 | 820Ω, ¼W, ±5%, Carbon | 2 | |
| R219, 220, (605) ×2 | ERD14TJ102 | 1 kΩ, ¼W, ±5%, Carbon | 4 | |
| R (606) ×2 | ERD14TJ152 | 1.5kΩ, ¼W, ±5%, Carbon | 2 | |
| R (613) ×2 | ERD14TJ182 | 1.8kΩ, ¼W, ±5%, Carbon | 2 | |
| R203, (611) ×2 | ERD14TJ222 | 2.2kΩ, ¼W, ±5%, Carbon | 3 | |
| R (602) ×2 | ERD14TJ332 | 3.3kΩ, ¼W, ±5%, Carbon | 2 | |
| R113 | ERD14TJ392 | 3.9kΩ, ¼W, ±5%, Carbon | 1 | |
| R221, 222 | ERD14TJ472 | 4.7kΩ, ¼W, ±5%, Carbon | 2 | |
| R513, 514, 515 | ERD14TJ682 | 6.8kΩ, ¼W, ±5%, Carbon | 3 | |
| R503, 504 | ERD14TJ103 | 10kΩ, ¼W, ±5%, Carbon | 2 | |
| R(604) ×2 | ERD14TJ123 | 12kΩ, ¼W, ±5%, Carbon | 2 | |
| R525, 526, | ERD14TJ183 | 18kΩ, ¼W, ±5%, Carbon | 2 | |
| R228 | ERD14TJ223 | 22kΩ, ¼W, ±5%, Carbon | 1 | |
| R214 | ERD14TJ273 | 27kΩ, ¼W, ±5%, Carbon | 1 | |
| R (609) ×2 | ERD14TJ333 | 33kΩ, ¼W, ±5%, Carbon | 2 | |
| R223, 224 | ERD14TJ473 | 47kΩ, ¼W, ±5%, Carbon | 2 | |
| R (603) ×2 | ERD14TJ563 | 56kΩ, ¼W, ±5%, Carbon | 2 | |
| R201, 225 | ERD14TJ104 | 100kΩ, ¼W, ±5%, Carbon | 2 | |
| R205, 206 | ERD14TJ184 | 180kΩ, ¼W, ±5%, Carbon | 2 | |
| R (601) ×2 | ERD14TJ474 | 470kΩ, ¼W, ±5%, Carbon | 2 | |
| R114 | ERD14VJ101 | 100Ω, ¼W, ±5%, Carbon | 1 | |
| R140, 233 | ERD14VJ151 | 150Ω, ¼W, ±5%, Carbon | 2 | |
| R217 | ERD14VJ331 | 330Ω, ¼W, ±5%, Carbon | 1 | |
| R703, 704 | ERD14VJ471 | 470Ω, ¼W, ±5%, Carbon | 2 | |
| R505, 506 | ERD14VJ821 | 820Ω, ¼W, ±5%, Carbon | 2 | |
| R115, 116 | ERD14VJ102 | 1kΩ, ¼W, ±5%, Carbon | 2 | |
| R509, 510 | ERD14VJ152 | 1.5kΩ, ¼W, ±5%, Carbon | 2 | |
| R204, 501, 502 | ERD14VJ222 | 2.2kΩ, ¼W, ±5%, Carbon | 3 | |
| R132, 133, 507, 508 | ERD14VJ272 | 2.7kΩ, ¼W, ±5%, Carbon | 4 | |
| R134, 135 | ERD14VJ332 | 3.3kΩ, ¼W, ±5%, Carbon | 2 | |
| R712 | ERD14VJ562 | 5.6kΩ, ¼W, ±5%, Carbon | 1 | |
| R516, 710 | ERD14VJ682 | 6.8kΩ, ¼W, ±5%, Carbon | 2 | |
| R707 | ERD14VJ103 | 10kΩ, ¼W, ±5%, Carbon | 1 | |
| R716, 717 | ERD14VJ183 | 18kΩ, ¼W, ±5%, Carbon | 2 | |
| R207, 208, 227, 708, 713 | ERD14VJ223 | 22kΩ, ¼W, ±5%, Carbon | 5 | |
| R213, 229, 230 | ERD14VJ273 | 27kΩ, ¼W, ±5%, Carbon | 3 | |
| R511, 512 | ERD14VJ393 | 39kΩ, ¼W, ±5%, Carbon | 2 | |
| R711 | ERD14VJ473 | 47kΩ, ¼W, ±5%, Carbon | 1 | |
| 7211, 212 | ERD14VJ563 | 56kΩ, ¼W, ±5%, Carbon | 2 | |
| R202, 209, 210, 226 | ERD14VJ104 | 100kΩ, ¼W, ±5%, Carbon | 4 | |
| R125, 231, 232 | ERD14VJ564 | 560kΩ, ¼W, ±5%, Carbon | 3 | |
| R (617, 620) ×2 | ERD14FJ3R3 | 3.3Ω, ¼W, ±5%, Carbon | 4 | |
| R702 | ERD14FJ100 | 10Ω, ¼W, ±5%, Carbon | 1 | |
| R (615, 616) ×2 | ERD14FJ470 | 47Ω, ¼W, ±5%, Carbon | 4 | |
| R (618, 619) ×2 | ERD14FJ151 | 150Ω, ¼W, ±5%, Carbon | 4 | |
| R714, 715 | ERD12TJ100 | 10Ω, ½W, ±5%, Carbon | 2 | |
| R709 | ERD12TJ330 | 33Ω, ½W, ±5%, Carbon | 1 | |
| R1005, 1006 | ERD12TJ470 | 47Ω, ½W, ±5%, Carbon | 2 | |
| R706 | ERD12TJ331 | 330Ω, ½W, ±5%, Carbon | 1 | |
| R (610) ×2 | ERD12TJ122 | 1.2kΩ, ½W, ±5%, Carbon | 2 | |
| R701, 705 | ERD18FJ4R7 | 4.7Ω, ⅛W, ±5%, Carbon | 2 | |
| R1001 | ERC12ZGK335 | 3.3MΩ, ½W, ±10%, Solid | 1 | |
| R (621, 622) ×2 | ERX2ANJR33 | 0.33Ω, 2W, ±5%, Metallic | 4 | |
| R718, 719 | ERG2ANJ331 | 330Ω, 2W, ±5%, Metallic | 2 | |
| R1010, 1011 | ERD14TJ474 | 470kΩ, ¼W, ±5%, Carbon | 2 | |
| R1012, 1013 | ERD14TJ104 | 100kΩ, ¼W, ±5%, Carbon | 2 | |
| **VARIABLE RESISTORS** | | | | |
| VR101 | EVLS3AA00B54 | 50kΩ (B), Muting Level Adjustment | 1 | |
| VR102 | EVLS3AA00B24 | 20kΩ (B), Signal Meter Adjustment | 1 | |
| VR103, 104 | EVLS3AA00B14 | 10kΩ (B), PLL VCO & Separation Adj | 2 | |
| VR501 | EVE2DA088G25 | 200kΩ (G), Balance Control | 1 | ○ |
| VR502 | EWF49A037BF5 | 250kΩ (B), Volume Control | 1 | ○ |
| VR503, 504 | EWF3NA037C15 | 100kΩ (C), Bass & Treble Control | 2 | ○ |
| VR (601) ×2 | EVLS0AA00B52 | 500Ω (B), ICQ Adjustment | 2 | |
| **CAPACITORS** | | | | |
| C9 | ECCD1H010CC | 1pF, 50WV, ±0.25pF, Ceramic | 1 | |
| C29 | ECCD1H020CC | 2pF, 50WV, ±0.25pF, Ceramic | 1 | |
| C119 | ECCD1H070DC | 7pF, 50WV, ±0.5pF, Ceramic | 1 | |
| C7, 26 | ECCD1H100KC | 10pF, 50WV, ±10%, Ceramic | 2 | |
| C1 | ECCD1H120KC | 12pF, 50WV, ±10%, Ceramic | 1 | |
| C13, 15 | ECCD1H150KC | 15pF, 50WV, ±10%, Ceramic | 2 | |
| C6 | ECCD1H180KR | 18pF, 50WV, ±10%, Ceramic | 1 | |
| C12 | ECCD1H180KS | 18pF, 50WV, ±10%, Ceramic | 1 | |
| C14, 117 | ECCD1H390KC | 39pF, 50WV, ±10%, Ceramic | 2 | |
| C (604) ×2 | ECCD1H390K | 39pF, 50WV, ±10%, Ceramic | 2 | |
| C113 | ECCD1H470KR | 47pF, 50WV, ±10%, Ceramic | 1 | |
| C (606) ×2 | ECCD1H330K | 33pF, 50WV, ±10%, Ceramic | 2 | |
| C110, 114, 115, 205, 206 | ECCD1H121K | 120pF, 50WV, ±10%, Ceramic | 5 | |
| C8, 217, 218 | ECCD1H181K | 180pF, 50WV, ±10%, Ceramic | 3 | |
| C104, 129 | ECCD1H271K | 270pF, 50WV, ±10%, Ceramic | 2 | |
| C (609, 611) ×2 | ECCD2H121K | 120pF, 500WV, ±10%, Ceramic | 4 | |

| Ref. No. | Part No. | Description | Per Set (Pcs.) | Remarks |
|---|---|---|---|---|
| C207, 208 | ECKD1H821KB | 820pF, 50WV, ±10%, Ceramic | 2 | |
| C2,3,4,5,11,16 120, 123 | ECKD1H102PF | 0.001μF, 50WV, +100 −0 % Ceramic | 8 | |
| C (610) ×2 | ECKD1H222PF | 0.0022μF, 50WV, 〃 Ceramic | 2 | |
| C10,103,106,121,124, 143,703,708,709,713 | ECKD1H103PF | 0.01μF, 50WV, 〃 Ceramic | 10 | |
| C21, 22, 122 | ECKD1H223PF | 0.022μF, 50WV, 〃 Ceramic | 3 | |
| C27, 125 | ECKD2H103PF | 0.01μF, 500WV, 〃 Ceramic | 2 | |
| C1001 | ECQU2A103MD | 0.01μF, 250VAC, ±20% Polyester | 1 | |
| C25 | ECQM05222KZ | 0.0022μF, 50WV, ±10%, Polyester | 1 | |
| C219, 220 | ECQM05272JZ | 0.0027μF, 50WV, ±5%, Polyester | 2 | |
| C501, 502, 511, 512 | ECQM05392KZ | 0.0039μF, 50WV, ±10%, Polyester | 4 | |
| C221, 222 | ECQM05103JZ | 0.01μF, 50WV, ±5%, Polyester | 2 | |
| C19, 101, 102, 107, 108 111, 112, 118, 144 | ECQM05223KZ | 0.022μF, 50WV, ±10%, Polyester | 9 | |
| C24 | ECQM05273KZ | 0.027μF, 50WV, ±10%, Polyester | 1 | |
| C503,504,513,514 | ECQM05333KZ | 0.033μF, 50WV, ±10%, Polyester | 4 | |
| C138, 139 | ECQM05223JZ | 0.022μF, 50WV, ±5%, Polyester | 2 | |
| C136,715,716 | ECQM05473KZ | 0.047μF, 50WV, ±10%, Polyester | 3 | |
| C505, 506 | ECQM05823KZ | 0.082μF, 50WV, ±10%, Polyester | 2 | |
| C507, 508 | ECQM05274KZ | 0.27μF, 50WV, ±10%, Polyester | 2 | |
| C1002 | ECQU2A103MD | 0.01μF, 250VAC, ±20%, Polyester | 1 | |
| C131 | ECQS1471JZ-K | 470pF, 125WV, ±5%, Styrol | 1 | |
| C209, 210 | ECEA6V33L | 33μF, 6.3WV, Electrolytic | 2 | |
| C211, 212 | ECEA6V47 | 47μF, 6.3WV, Electrolytic | 2 | |
| C (602) ×2 | ECEA6V100L | 100μF, 6.3WV, Electrolytic | 2 | |
| C203, 204, (603) ×2 | ECEA6V220L | 220μF, 6.3WV, Electrolytic | 4 | |
| C109 | ECEA10V33L | 33μF, 10WV, Electrolytic | 1 | |
| C130 | ECEA10V47L | 47μF, 10WV, Electrolytic | 1 | |
| C17, 28, 142 | ECEA10V100L | 100μF, 10WV, Electrolytic | 3 | |
| C707 | ECEA10V470L | 470μF, 10WV, Electrolytic | 1 | |
| C23, 128, 250 | ECEA16V10L | 10μF, 16WV, Electrolytic | 3 | |
| C706 | ECEA16V47L | 47μF, 16WV, Electrolytic | 1 | |
| C105, 116, 127 137, 140, 141 | ECEA25V3R3L | 3.3μF, 25WV, Electrolytic | 6 | |
| C213, 214 | ECEA25V4R7L | 4.7μF, 25WV, Electrolytic | 2 | |
| C711 | ECEA25V100L | 100μF, 25WV, Electrolytic | 1 | |
| C (605) ×2, 705, 714 | ECEA25V220L | 220μF, 25WV, Electrolytic | 4 | |
| C223, 224, 704 | ECEA25V470L | 470μF, 25WV, Electrolytic | 3 | |
| C (607) ×2 | ECEA35V47L | 47μF, 35WV, Electrolytic | 2 | |
| C710 | ECEA35V100 | 100μF, 35WV, Electrolytic | 1 | |
| C (608) ×2 | ECEA35V220 | 220μF, 35WV, Electrolytic | 2 | |
| C18, 20, 126, 134, 215, 216 (601) ×2 | ECEA50V1G | 1μF, 50WV, Electrolytic | 8 | |
| C712 | ECEA25V33L | 33μF, 25WV, Electrolytic | 1 | |
| C133 | ECAG25ER1X | 0.1μF, 25WV, Electrolytic | 1 | |
| C135 | ECAG25ER33X | 0.33μF, 25WV, Electrolytic | 1 | |
| C201, 202 | ECSZ25EF1 | 1μF, 25WV, Electrolytic | 2 | |
| C701, 702 | ECET35R4700Y | 4700μF, 35WV, Electrolytic | 2 | |

## VARIABLE CAPACITORS

| | | | | |
|---|---|---|---|---|
| CV1~5 (CT1~4) | ECV5MX25X20G | Tuning Gang, AM/FM (with Trimmer) | 1 | |
| CT5 | ECV1ZW06P35 | FM OSC Trimmer, 6pF | 1 | |

## COMPONENT COMBINATIONS

| | | | | |
|---|---|---|---|---|
| Z1 | EXAF203Z471 | AM Detector | 1 | |
| Z101 | EXAF5DL04C | FM Detector | 1 | |
| Z701, 702 | RXAF103P22HD | Hum Cancel, 0.01μF(×2), 500WV | 2 | |

## SWITCHES

| | | | | |
|---|---|---|---|---|
| S501 | SSRA81 | Selector Switch | 1 | ○ |
| S502,503,504,505 | SSHA57-1S | Tape 1, 2, Mode & Filter Switch | 1 | ○ |
| S506, 507, | SSHA56S | Loudness & Muting Switch | 1 | ○ |
| S1001 | ESRC124F30CE | Speakers Selector Switch | 1 | ○ |
| S1002 | ESB7040T | Power Source Switch (with Button) | 1 | ○ |
| S1003 | SSRA71S | Voltage Selector Switch | 1 | |

## RELAY and METER

| | | | | |
|---|---|---|---|---|
| RLY701 | SSYA1 | Speakers Protection Relay | 1 | |
| | SSMA25-2 | Signal Meter | 1 | |

## FUSES and LIGHTS

| | | | | |
|---|---|---|---|---|
| F1 | XBAS2B3002 | 3A Fuse, Power Source | 1 | |
| F2 | XBAS1B3003 | 3A Fuse, Power Source | 2 | |
| F3, 4 | XBAS1A3301 | 3.3A Fuse, Circuit Protection | 2 | |
| F6 | XBAS2B1501 | 1.5A Fuse, Power Source | 1 | |
| PL1~6 | XAM35K | Dial Lamp, 6.3V 0.25A | 6 | |
| PL7 | XAMR38S150A | Stereo Eye, 6.3V 40mA | 1 | |

## CABINET PARTS

| | | | | |
|---|---|---|---|---|
| CA1 | XTS3+8BK | Black Screw, Panel M'tg. | 2 | |
| CA2 | SGWA1410 | Front Panel | 1 | ○ |
| CA3 | SBNA116E | Knob, Speaker Switch, Bass, Treble, Volume, Balance & Selector Switch | 6 | |
| CA4 | XTV3+8CK | Black Screw, Panel M'tg. | 2 | |
| CA5 | SBCA56 | Button, Push Siwtches | 6 | ○ |
| CA6 | SBNA131E | Knob, Tuning | 1 | ○ |
| CA7 | SGUA34 | Glass Plate | 1 | ○ |
| CA8(BRN) | SKAA830 | Cabinet (Brown Wood) | 1 | ○ |
| CA8(BLK) | SKAA830-1 | Cabinet (Black Wood) | 4 | |
| CA9(BLK) | XSB4+16KS | Screw, Black Cabinet M'tg. | 4 | |
| CA9(BRN) | XSB4+16BVCS | Screw, Brown Cabinet M'tg. | 4 | |
| CA10 | SGPA680-1A | Rear Panel | 1 | ○ |
| CA11 | SMA197 | Mounting, AM Antenna Coil | 1 | ○ |
| CA12 | SMAA6-2 | Band, AM Antenna Coil | 1 | |
| CA13 | SJFA5201-1 | Fuse Holder, Circuit Protection | 1 | |
| CA14 | SJSA66-1 | Socket, AC | 2 | |
| CA15 | RHR111 | Bushing, AC Cord | 1 | |
| CA16 | SJFA4401-2 | Terminal, Antenna | 1 | |
| CA17 | SJFA3020 | Terminal, Input | 1 | ○ |
| CA18 | XSN26+12 | Screw, Fuse Cap M'tg. | 1 | |
| CA19 | SJFA5202-1 | Fuse Cap | 1 | |
| CA20 | SJFA4803-1 | Terminal, Speakers | 1 | |
| CA21 | SJAA3-1 | AC Cord | 1 | |
| CA22 | SKUA440 | Bottom Board | 1 | ○ |
| CA23 | SKL145 | Leg | 4 | ○ |
| CA24 | XTV3+8CFYR | Red Screw, Bottom Board M'tg. | 5 | |
| CA25 | RHR106 | Bushing, AM Antenna Lead | 1 | |
| | XSN3+6FYRS | Red Screw, Bottom Board M'tg. | 1 | |
| CA26 | RJS31-1 | DIN Socket, Tape Monitor | 1 | |

## CHASSIS PARTS

| | | | | |
|---|---|---|---|---|
| CH1 | SDHA58-1 | Mounting, Meter & Dial Scale | 1 | ○ |
| CH2 | SHRA916-1 | Lock Pin, Dial Scale | 2 | |
| CH3 | SKDA530 | Dial Scale | 1 | ○ |
| CH4 | SUSA69 | Spring, Meter | 1 | ○ |
| CH5 | SUMA8-1 | Mounting, Dial Scale | 1 | |
| CH6 | SJJA16 | Jack, Headphones | 1 | ○ |
| CH7 | RDY34 | Shaft, Pulley (RDR20) | 4 | |
| CH8 | RDR20 | Pulley, Dial Cord | 4 | |
| CH9 | RNW150-2 | Lock Washer, Pulley | 5 | |
| CH10 | SDUA11 | Filter, Dial Light | 1 | ○ |
| CH11 | XTV3+8CK | Black Screw, Lamp House M'tg. | 4 | |
| CH12 | XNG3CS | Nut, Lamp Holder M'tg. | 2 | |
| CH13 | SMPA59 | Lamp House | 1 | ○ |
| CH14 | SDPA8 | Pointer, Dial | 1 | ○ |
| CH15 | SJSA206 | Holder, Dial Lamp | 1 | ○ |
| CH16 | SDZ051-1 | Cord, Dial [200cm (78¾")] | 1 roll | |
| CH17 | RDR23 | Pulley, Dial Cord | 1 | |
| CH18 | RDY32 | Shaft, Pulley (RDR23) | 1 | |
| CH19 | SHGA204 | Rubber Cushion, Stereo Eye | 1 | |
| CH20 | SDTA10-1S | Tuning Shaft, Complete | 1 | ○ |
| CH21 | SDDA471S | Drum, Tuning | 1 | |
| CH22 | SDSA4121 | Spring, Drum | 1 | |
| | XXAR3H6S | Screw, Drum M'tg. | 2 | |
| | SJS5405 | 4Pin Socket, Lead Connector | 2 | |
| | SJS5603 | 6Pin Socket, Lead Connector | 1 | |
| CH23 | SHRA919 | Lock Pin, Dial Light Filter | 3 | ○ |
| | SJS41 | Pin Clamp, (SJS5405, SJS5603) | 14 | |

## ACCESSORIES

| | | | | |
|---|---|---|---|---|
| A1 | SSAA3 | FM Antenna Cord | 1 | |
| A2 | XBAS1A3301 | Circuit Protection Fuse (3, 3A) | 2 | |
| A3 | RJP5 | Pin Plug | 4 | |
| A4 | RJP16A5 | AC Plug | 1 | |
| A5 | RJP17AS | AC Plug | 1 | |

## PACKING PARTS

| | | | | |
|---|---|---|---|---|
| P1 | SPPA16-1 | Soft Cover | 1 | |
| P2 | SPS5 | Pad, AM Bar Antenna | 1 | ○ |
| P3 | SPP163 | Polyethylene Bag | 1 | |
| P4 | SPS1 | Pad, Left Side | 1 | ○ |
| P5 | SPS3 | Pad, Right Side | 1 | ○ |
| P6 | SPS13 | Pad, Bottom Board | 1 | ○ |
| P7 | SPG499 | Carton Box, Outer | 1 | ○ |
| P8 | SQF969 | Printed Matter, Complete | 1 | ○ |
| P9 | SPN5081 | Carton Box, Inner | 1 | ○ |
| P10 | SPNA187 | Pad, Upper | 1 | |

## PACKING PARTS (for Germany)

| | | | | |
|---|---|---|---|---|
| P1 | SPPA16-1 | Soft Cover | 1 | |
| P2 | SPS5 | Pad, AM Bar Antenna | 1 | |
| P3 | SPP163 | Polyethylene Bag | 1 | |
| P4 | SPS1 | Pad, Left Side | 1 | |
| P5 | SPS3 | Pad, Right Side | 1 | |
| P6 | SPS13 | Pad, Bottom Board | 1 | |
| P7 | SPG509 | Carton Box | 1 | ○ |
| P8(Germany) | SQF969 | Printed Matter, Complete | | |
| P9 | ---------- | Deletion | ----- | ------ |
| P10 | ---------- | Deletion | ----- | ------ |

# Model SA-5150 REPLACEMENT PARTS LIST

**NOTES:**

1. Part numbers are indicated on most mechanical parts. Please use this part number, for parts orders.

| Ref. No. | Part No. | Description | Per Set (Pcs.) | Remarks |
|---|---|---|---|---|
| **INTEGRATED CIRCUITS** | | | | |
| IC101 | AN217BB | FM IF, AM RF & AM IF Amplifier | 1 | |
| IC102 | SVISN76115N | PLL Type FM MPX | 1 | |
| IC601, 602 | SVISTK027K | Power Amplifier | 2 | |
| **TRANSISTORS** | | | | |
| TR1 | 3SK39-Q | FM RF Amplifier | 1 | |
| TR2 | 2SC922-M | FM Mixer | 1 | |
| TR3 | 2SC839-H | FM Oscillator | 1 | |
| TR101,102,103,104 | 2SC829-C | FM IF Amplifier | 4 | |
| TR105 | 2SA564-R | Muting Switching | 1 | |
| TR201, 202 | 2SA721-T | Equalizer Amplifier | 2 | |
| TR203, 204 | 2SC1327-T | Equalizer Amplifier | 2 | |
| TR701 | 2SA699-R | Ripple Filter | 1 | |
| **DIODES** | | | | |
| D1, 2, 101, 104, 105, 106, 107 | OA99 | AM, Meter, FM Auto Stereo & FM AGC Detector | 7 | |
| D102, 103 | 2-OA99 | FM Discriminator | 1 pair | |
| D108 | MA150 | Muting Switching | 1 | |
| D701, 702 | RVD10DC1 | Rectifier | 2 | |
| D703, 704 | RVD10DC1R | Rectifier | 2 | |
| D705 | SVDA10D1M | Rectifier | 1 | |
| D706 | SVDARD10E | 10V Zener | 1 | |
| **COILS and TRANSFORMERS** | | | | |
| L1 | SLAA4W1-3 | FM Balun Coil | 1 | |
| L2 | SLAA4N9 | FM Antenna Coil | 1 | |
| L3 | RLQY25S5 | Choke Coil | 1 | |
| L4 | SLDA4N18 | FM Detector Coil | 1 | |
| L5 | RLQY15G5 | Choke Coil | 1 | |
| L6 | SLOA4N9 | FM Oscillator Coil | 1 | |
| L7 | SLQX101-2D | Choke Coil | 1 | |
| L8 | SLFA2E23 | AM Antenna Coil | 1 | ○ |
| L9 | SLOA2C6 | AM Oscillator Coil | 1 | |
| L101 | SLIA4B1 | FM AGC Coil | 1 | |
| L701 | SLQX101-2D | Choke Coil | 1 | |
| T1 | RLI7W105S-T | AM 1st IF Transformer | 1 | |
| T1(England) | RLI7W108P-T | AM IF Transformer(for England) | 1 | |
| T2 | RLI2C450P-T | AM 2nd IF Transformer | 1 | |
| T101 | SLIA4C541 | FM Discriminator, Primary | 1 | |
| T102 | SLIA4C56 | FM Discriminator, Secondary | 1 | |
| T103 | SLIA4C241-T | FM Auto Stereo IF Transformer | 1 | |
| T1001 | SLT5N133 -W | Power Transformer | 1 | ○ |
| **CERAMIC FILTERS** | | | | |
| CF101,102,103 | SVF107MA8A | FM IF Circuit, Red, 10.7 MHz | each 3 | |
| | SVF107MA8B | FM IF Circuit, Blue, 10.67MHz | | |
| | SVF107MA8C | FM IF Circuit, Orange, 10.73MHz | | |
| | SVF107MA8D | FM IF Circuit, Black, 10.64MHz | | |
| | SVF107MA8E | FM IF Circuit, White, 10.76MHz | | |
| **RESISTORS** | | | | |
| R702 | ERD14TJ100 | 10Ω, ¼W, ±5%, Carbon | 1 | |
| R607, 608 | ERD14TJ220 | 22Ω, ¼W, ±5%, Carbon | 2 | |
| R131 | ERD14TJ680 | 68Ω, ¼W, ±5%, Carbon | 1 | |
| R609, 610 | ERD14TJ820 | 82Ω, ¼W, ±5%, Carbon | 2 | |
| R217,218,615,616 | ERD14TJ331 | 330Ω, ¼W, ±5%, Carbon | 4 | |
| R613, 614 | ERD14TJ391 | 390Ω, ¼W, ±5%, Carbon | 2 | |
| R216, 703, 704 | ERD14TJ471 | 470Ω, ¼W, ±5%, Carbon | 3 | |
| R219,220,603,604 | ERD14TJ102 | 1kΩ, ¼W, ±5%, Carbon | 4 | |
| R 203,204,129,130 | ERD14TJ222 | 2.2kΩ, ¼W, ±5%, Carbon | 4 | |
| R125, 126 | ERD14TJ272 | 2.7kΩ, ¼W, ±5%, Carbon | 2 | |
| R221, 222 | ERD14TJ472 | 4.7kΩ, ¼W, ±5%, Carbon | 2 | |
| R127, 128 | ERD14TJ681 | 680Ω, ¼W, ±5%, Carbon | 2 | |
| R611, 612 | ERD14TJ123 | 12kΩ, ¼W, ±5%, Carbon | 2 | |
| R228 | ERD14TJ223 | 22kΩ, ¼W, ±5%, Carbon | 1 | |
| R213, 214 | ERD14TJ273 | 27kΩ, ¼W, ±5%, Carbon | 2 | |
| R211, 212 | ERD14TJ563 | 56kΩ, ¼W, ±5%, Carbon | 2 | |
| R201,202,209,210 | ERD14TJ104 | 100kΩ, ¼W, ±5%, Carbon | 4 | |
| R205, 206 | ERD14TJ184 | 180kΩ, ¼W, ±5%, Carbon | 2 | |
| R601, 602 | ERD14TJ474 | 470kΩ, ¼W, ±5%, Carbon | 2 | |
| R619, 620 | ERD14FJ390 | 39Ω, ¼W, ±5%, Carbon | 2 | |
| R605, 606 | ERD14FJ560 | 56Ω, ¼W, ±5%, Carbon | 2 | |
| R705 | ERD14FJ101 | 100Ω, ¼W, ±5%, Carbon | 1 | |
| R617, 618 | ERD14FJ121 | 120Ω, ¼W, ±5%, Carbon | 2 | |
| R706 | ERD14FJ271 | 270Ω, ¼W, ±5%, Carbon | 1 | |
| R621, 622 | ERD14FJ681 | 680Ω, ¼W, ±5%, Carbon | 2 | |
| R113 | ERD14VJ101 | 100Ω, ¼W, ±5%, Carbon | 1 | |
| R137 | ERD14VJ151 | 150Ω, ¼W, ±5%, Carbon | 1 | |
| R117, 215 | ERD14VJ471 | 470Ω, ¼W, ±5%, Carbon | 2 | |
| R120, 121, 138 | ERD14VJ102 | 1kΩ, ¼W, ±5%, Carbon | 3 | |
| R207, 208, 227 | ERD14VJ223 | 22kΩ, ¼W, ±5%, Carbon | 3 | |
| R229, 230 | ERD14VJ333 | 33kΩ, ¼W, ±5%, Carbon | 2 | |
| R223, 224 | ERD14VJ473 | 47kΩ, ¼W, ±5%, Carbon | 2 | |
| R225, 226 | ERD14VJ104 | 100kΩ, ¼W, ±5%, Carbon | 2 | |
| R231, 232 | ERD14VJ564 | 560kΩ, ¼W, ±5%, Carbon | 2 | |
| R701 | ERD18FJ4R7 | 4.7Ω, ⅛W, ±5%, Carbon | 1 | |
| R623, 624 | ERD12TJ100 | 10Ω, ½W, ±5%, Carbon | 2 | |
| R625, 626 | ERG1ANJ331 | 330Ω, 1 W, ±5%, Metallic | 2 | |
| R1001 | ERC12ZGK335 | 3.3MΩ, ½W, ±10%, Solid | 1 | |
| R1002, 1003 | ERD14TJ104 | 100kΩ, ¼W, ±5%, Carbon | 2 | |
| R1004, 1005 | ERD14TJ474 | 470kΩ, ¼W, ±5%, Carbon | 2 | |
| **VARIABLE RESISTORS** | | | | |
| VR101 | EVLS3AA00B54 | 50kΩ (B), FM Auto Stereo Level Adj. | 1 | |
| VR102 | EVLS3AA00B24 | 20kΩ (B), Meter Level Adjustment | 1 | |
| VR103, 104 | EVLS3AA00B14 | 10kΩ (B), VCO & Separation Adj. | 2 | |
| VR501 | EVE2DA088G25 | 200kΩ (B), Balance Control | 1 | |
| VR601 | EWF49A037BF5 | 250kΩ (B), Volume Control | 1 | |
| VR602, 603 | EWF3NA039C14 | 10kΩ (B), Bass & Treble Control | 2 | |
| **CAPACITORS** | | | | |
| C8 | ECCD1H010CC | 1PF, 50WV, ±0.25pF, Ceramic | 1 | |
| C6, 26 | ECCD1H100KC | 10pF, 50WV, ±10%, Ceramic | 2 | |
| C1 | ECCD1H120KC | 12pF, 50WV, ±10%, Ceramic | 1 | |
| C14, 27 | ECCD1H150KC | 15pF, 50WV, ±10%, Ceramic | 2 | |
| C117 | ECCD1H180KC | 18pF, 50WV, ±10%, Ceramic | 1 | |
| C12 | ECCD1H180KS | 18pF, 50WV, ±10%, Ceramic | 1 | |
| C5 | ECCD1H180KR | 18pF, 50WV, ±10%, Ceramic | 1 | |
| C13 | ECCD1H390KC | 39pF, 50WV, ±10%, Ceramic | 1 | |
| C132 | ECCD1H470KR | 47pF, 50WV, ±10%, Ceramic | 1 | |
| C108,113,114,116, 205,206,217,218 | ECCD1H121K | 120pF, 50WV, ±10%, Ceramic | 8 | |
| C7 | ECCD1H181K | 180pF, 50WV, ±10%, Ceramic | 1 | |
| C109, 133 | ECCD1H271K | 270pF, 50WV, ±10%, Ceramic | 2 | |
| C207, 208 | ECKD1H821KB | 820pF, 50WV, ±10%, Ceramic | 2 | |
| C2, 3, 4, 15, 707, 710 | ECKD1H102PF | 0.001μF, 50WV, $^{+100}_{-}$%, Ceramic | 6 | |
| C9,10,11,16,21, 101,104,118,119, 122,135,140,707,710 | ECKD1H103PF | 0.01μF, 50WV, 〃 Ceramic | 14 | |
| C708 | ECKD1H223PF | 0.022μF, 50WV, 〃 Ceramic | 1 | |
| C25 | ECQM05222KZ | 0.0022μF, 50WV, ±10%, Polyester | 1 | |
| C219, 220 | ECQM05222JZ | 0.0022μF, 50WV, ±5%, Polyester | 2 | |
| C221, 222 | ECQM05822JZ | 0.0082μF, 50WV, ±5%, Polyester | 2 | |
| C18,22,24,103, 105,106,107,110, 111,134,136 | ECQM05223KZ | 0.022μF, 50WV, ±10%, Polyester | 11 | |
| C501, 502 | ECQM05333KZ | 0.033μF, 50WV, ±10%, Polyester | 2 | |
| C123, 625, 626 | ECQM05473KZ | 0.047μF, 50WV, ±10%, Polyester | 3 | |
| C605, 606 | ECQM05823KZ | 0.082μF, 50WV, ±10%, Polyester | 2 | |
| C607, 608 | ECQM05394KZ | 0.39μF, 50WV, ±10%, Polyester | 2 | |
| C603, 604 | ECQM05474KZ | 0.47μF, 50WV, ±10%, Polyester | 2 | |
| C124 | ECQS1471JZ-K | 470pF, 125WV, ±5%, Styrol | 1 | |
| C209, 210 | ECEA6V33L | 33μF, 6.3WV, Electrolytic | 2 | |
| C211, 212 | ECEA6V47L | 47μF, 6.3WV, Electrolytic | 2 | |
| C121 | ECEA6V100L | 100μF, 6.3WV, Electrolytic | 1 | |
| C203, 204 | ECEA6V220L | 220μF, 6.3WV, Electrolytic | 2 | |
| C128 | ECEA10V33L | 33μF, 10WV, Electrolytic | 1 | |
| C17 | ECEA10V47L | 47μF, 10WV, Electrolytic | 1 | |
| C102,137,615,616 | ECEA10V100L | 100μF, 10WV, Electrolytic | 4 | |
| C23, 138 | ECEA16V10L | 10μF, 16WV, Electrolytic | 2 | |
| C613, 614 | ECEA16V33L | 33μF, 16WV, Electrolytic | 2 | |
| C705 | ECEA16V47L | 47μF, 16WV, Electrolytic | 1 | |
| C706 | ECEA16V470L | 470μF, 16WV, Electrolytic | 1 | |
| C115, 130, 131 | ECEA25V3R3L | 3.3μF, 25WV, Electrolytic | 3 | |
| C112, 213, 214 | ECEA25V4R7L | 4.7μF, 25WV, Electrolytic | 3 | |
| C609,610,611,612 | ECEA25V4R7LM | 4.7μF, 25WV, Electrolytic | 4 | |
| C619, 620 | ECEA25V100L | 100μF, 25WV, Electrolytic | 2 | |
| C704 | ECEA25V330L | 330μF, 25WV, Electrolytic | 1 | |
| C223, 703, 709 | ECEA25V470L | 470μF, 25WV, Electrolytic | 3 | |
| C621,622,623,624 | ECEA35V10L | 10μF, 35W V Electrolytic | 4 | |
| C617, 618 | ECEA35V100L | 100μF, 35WV, Electrolytic | 2 | |
| C19,20,127,215, 216, 601, 602 | ECEA50V1G | 1μF, 50WV, Electrolytic | 7 | |
| C201, 202 | ECSZ25EF1 | 1μF, 25WV, Electrolytic | 2 | |
| C126 | ECAG25ER1X | 0.1μF, 25WV, Electrolytic | 1 | |

## SA-5150

| Ref. No. | Part No. | Description | Per Set (Pcs.) | Remarks |
|---|---|---|---|---|
| C129 | ECAG25ER33X | 0.33μF, 25WV, Electrolytic | 1 | |
| C701, 702 | ECET25R4700S | 4700μF, 25WV, Electrolytic | 2 | |
| **VARIABLE CAPACITORS** | | | | |
| CV1~5 (CT1,2,4,5) | ECV5MX25X20G | Tuning Gang, AM/FM (With Trimmer) | 1 | ○ |
| CT3 | ECV1ZW06P35 | FM OSC Trimmer, 6pF | 1 | |
| **COMPONENT COMBINATIONS** | | | | |
| Z1 | EXAF203Z471 | AM Detector | 1 | |
| Z101 | EXA5DL04C | FM Detector | 1 | |
| Z102, 103 | EXAM505F | Low Pass Filter | 2 | |
| Z701, 702 | RXAF103P22HD | Hum Cancel, 0.01μF(X2),500WV | 2 | |
| **SWITCHES** | | | | |
| S103 | SSRA81 | Selector Switch | 1 | |
| S501, 502, 503 | SSHA59S | Mode, Tape Monitor, Loudness Switch | 1 | ○ |
| S601, 602 | SSHA58S | Main, Remote Speakers Switch | 1 | ○ |
| S1001 | ESB7036 | Power Switch (with Button) | 1 | |
| S1001(England) | ESB7051 | Power Switch(for England) | 1 | ○ |
| S1002 | SSRA71S | Voltage Selector Switch | 1 | |
| **METER** | | | | |
| | SSMA25-2 | Signal Meter | 1 | |
| **FUSES and LIGHTS** | | | | |
| F1 | XBAS2B2002 | 2A Fuse, Power Source | 1 | |
| F2, 3 | XBAS1A2501 | 2.5A Fuse, Circuit Protection | 2 | |
| F4 | XBA2K10NS5 | 1A Fuse, Power Source | 1 | |
| F5 | XBAS1B3001 | 3A Fuse, Power Source | 1 | |
| PL1~6 | XAM35K | Dial Lamp, 6.3V 0.25A | 6 | |
| PL7 | XAMR38S200 | Stereo Eye, 6.3V, 40mA | 1 | |
| **CABINET PARTS** | | | | |
| CA1 | XTS3+8BK | Black Screw, Panel M'tg. | 2 | |
| CA2 | SGWA1420 | Front Panel | 1 | ○ |
| CA3 | SBCA56 | Button, Speakers, Loudness, Tape-Monitor & Mode Switch | 5 | |
| CA4 | SBNA116E | Knob, Bass, Treble, Volume, Balance & Selector Switch | 5 | |
| CA5 | XTV3+8CK | Black Screw, Panel M'tg. | 2 | |
| CA6 | SBNA131E | Knob, Tuning | 1 | |
| CA7 | SGUA34 | Glass Plate | 1 | |
| CA8(BRN) | SKAA830 | Cabinet(Brown Wood) | 1 | |
| CA8(BLK) | SKAA830-1 | Cabinet(Black Wood) | 1 | ○ |
| CA9(BRN) | XSB4+16BVCS | Screw, Brown Cabinet M'tg. | 4 | |
| CA9(BLK) | XSB4+16KS | Screw, Black Cabinet M'tg. | 4 | |
| CA10 | SGPA700-1A | Rear Panel | 1 | ○ |
| CA10(England) | SGPA700-2A | Rear Panel, (for England) | 1 | ○ |
| CA11 | SJFA5201-1 | Holder, Circuit Protection Fuses | 1 | |
| CA12 | SJSA66-1 | Socket, AC | 1 | |
| CA13 | RHR111 | Bushing, AC Cord | 1 | |
| CA13(England) | SHR113 | Bushing, AC Cord(for England) | 1 | |
| CA14 | SJFA4401-2 | Terminal, Ext. Antenna | 1 | |
| CA15 | SJFA3806 | Terminal, PHONO, AUX & Tape Monitor | 1 | ○ |
| CA16 | SJFA5202-1 | Cover, Ciruit Protection Fuses | 1 | |
| CA17 | XSN26+12 | Screw, Fuse Cover M'tg. | 1 | |
| CA18 | SJFA4803-1 | Terminal, Speakers | 1 | |
| CA19 | SJAA3-1 | AC Cord | 1 | |
| CA19(England) | SJA73 | AC Cord(for England) | 1 | |
| CA20 | XNG4BS | Nut, Leg M'tg. | 4 | |
| CA21 | XWG4 | Washer, Leg M'tg. | 4 | |
| CA22 | XTW3+10EFY | Screw, Bottom Baard M'tg. | 6 | |
| CA23 | SKLA7 | Leg | 4 | ○ |
| CA24 | XSN4+14S | Screw, Leg M'tg. | 4 | |
| CA25 | SKUA450-1 | Bottom Board | 1 | ○ |
| CA26 | RJS31-1 | Socket, DIN(Tape Monitor) | 1 | |

| Ref. No. | Part No. | Description | Per Set (Pcs.) | Remarks |
|---|---|---|---|---|
| **CHASSIS PARTS** | | | | |
| CH1 | XTV3+8C | Screw, Meter Bracket M'tg. | 3 | |
| CH2 | SDHA59-1 | Bracket, Meter | 1 | ○ |
| CH3 | SKDA530 | Scale, Dial | 1 | |
| CH4 | SHRA916-1 | Lock Pin, Dial Scale | 2 | |
| CH5 | RDY34 | Shaft, Pulley | 4 | |
| CH6 | RDR20 | Pulley, Dial Cord | 4 | |
| CH7 | RNW150-2 | Lock Washer, Pulley | 5 | |
| CH8 | SUMA8-1 | Mounting, Dial Scale | 1 | |
| CH9 | SHRA919 | Lock Pin, Dial Light Filter | 3 | |
| CH10 | SJJA16 | Jack, Headphones | 1 | |
| CH11 | RDR23 | Pulley, Dial Cord | 1 | |
| CH12 | SDUA11 | Blue Filter, Dial Light | 1 | |
| CH13 | XNG3CS | Nut, Lamp Holder M'tg. | 2 | |
| CH14 | SDPA8 | Pointer, Dial | 1 | |
| CH15 | SJSA206 | Holder, Dial Lamp | 1 | |
| CH16 | SDZ051-1 | Cord, Dial (200cm [78¾"]) | 1 roll | |
| CH17 | SUSA69 | Spring, Meter | 1 | |
| CH18 | SHGA204 | Rubber Bracket, Stereo Eye | 1 | |
| CH19 | SDTA10-1S | Tuning Shaft, Complete (with Flywheel) | 1 | |
| CH20 | SDDA471S | Drum, Dial | 1 | |
| CH21 | SDSA4121 | Spring, Drum | 1 | |
| | XXAR3H6S | Screw, Drum M'tg. | 2 | |
| | SJS5405 | 4 pin Socket, Lead Connector | 1 | |
| | SJS5603 | 6 pin Socket, Lead Connector | 1 | |
| | SJS41 | Pin Clamp (SJS5405, SJS5603) | 10 | |
| **ACCESSORIES** | | | | |
| A1 | SSAA3 | FM Antenna Cord | 1 | |
| A2 | XBAS1A2501 | Circuit Protection Fuse(2.5A) | 2 | |
| A3 | RJP5 | Pin Plug | 4 | |
| A4 | RJP16AS | AC Plug } Not belong for England | 1 | |
| A5 | RJP17AS | AC Plug } Not belong for England | 1 | |
| **PACKING PARTS** | | | | |
| P1 | SPPA16-1 | Soft Cover | 1 | |
| P3 | SPP163 | Polyethylene Bag | 1 | |
| P4 | SPS1 | Pad, Left Side | 1 | |
| P5 | SPS3 | Pad, Right Side | 1 | |
| P7 | SPG497 | Carton Box, Outer | 1 | ○ |
| P8 | SQF957 | Printed Matter, Complete | 1 | ○ |
| P9 | SPN5079 | Carton Box, Inner | 1 | ○ |
| P10 | SPNA187 | Pad, Upper | 1 | |
| **PACKING PARTS (for Germany & England)** | | | | |
| P1 | SPPA16-1 | Soft Cover | 1 | |
| P3 | SPP163 | Polyethylene Bag | 1 | |
| P4 | SPS1 | Pad, Left Side | 1 | |
| P5 | SPS3 | Pad, Right Side | 1 | |
| P7 | SPG507 | Carton Box | 1 | ○ |
| P8(Germany) | SQF957 | Printed Matter, Complete | 1 | |
| P8(England) | SQF1043 | Printed Matter(for England) | 1 | ○ |
| P9 | ---------- | Deletion | ------ | |
| P10 | ---------- | Deletion | ------ | |



Printed in Japan